Self Diagnosis
Supported model

SERVICE MANUAL

BG-3S CHASSIS

5MODEL	COMMANDER	DEST.	CHASSIS NO.
KV-XF29M97	RM-953	India	SCC-U22L-A
KV-XF29M67	RM-953	India	SCC-U22M-A

MODEL	COMMANDER	DEST.	CHASSIS NO.

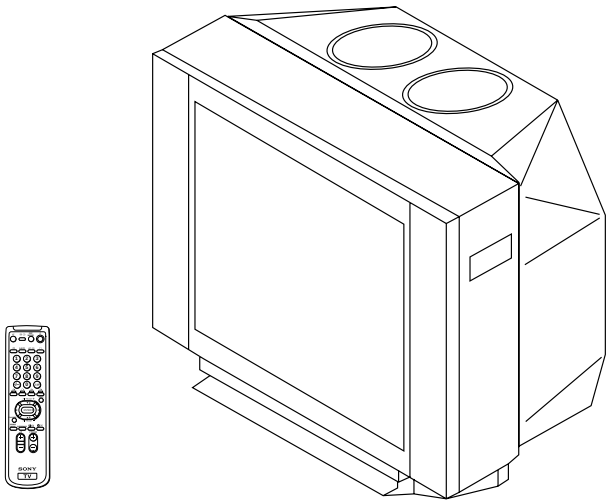

TRINITRON ® COLOR TV

SONY®

http://cxema.ru

SPECIFICATIONS

		Note
Power requirements	110-240 V AC, 50/60 Hz	
Power consumption (W)	Indicated on the rear of the TV	
Television system	B/G, I, D/K, M	
Color system	PAL, PAL 60, SECAM, NTSC4.43, NTSC3.58	
Channel coverage		
B/G	VHF: E2 to E12 / UHF: E21 to E69 / CATV: S01 to S03, S1 to S41	
I	UHF: B21 to B68 / CATV: S01 to S03, S1 to S41	
D/K	VHF: C1 to C12, R1 to R12 / UHF: C13 to C57, R21 to R60 CATV: Z1 to Z39, S01 to S03, S1 to S41	
M	VHF: A2 to A13 / UHF: A14 to A79 / CATV: A-8 to A-2, A to W+4, W+6 to W+84	
(Antenna)	75-ohm external terminal	
Audio output	6W + 6W	
3D WOOFER	15W	
Number of terminal		
(Video)	Input: 3 Output: 1	Phono jacks; 1 V_{P-P}, 75 ohms
(Audio)	Input: 3 Output: 1	Phono jacks; 500 mVrms
(S Video)	Input: 2	Y : 1 Vp-p, 75 ohms, unbalanced, sync negative C : 0.286 Vp-p, 75 ohms
(Headphone)	Output: 1	Minijack
Picture tube	29 inch	
Tube size (cm)	72	Measured diagonally
Screen size (cm)	68	Measured diagonally
Dimension (w/h/d, mm)	794 × 589 × 517	
Mass (kg)	54	

Design and specifications are subject to change without notice.

CAUTION

SHORT CIRCUIT THE ANODE OF THE PICTURE TUBE AND THE ANODE CAP TO THE METAL CHASSIS, CRT SHIELD, OR CARBON PAINTED ON THE CRT, AFTER REMOVING THE ANODE.

SAFETY-RELATED COMPONENT WARNING!!

COMPONENTS IDENTIFIED BY SHADING AND MARK ⚠ ON THE SCHEMATIC DIAGRAMS, EXPLODED VIEWS AND IN THE PARTS LIST ARE CRITICAL TO SAFE OPERATION. REPLACE THESE COMPONENTS WITH SONY PARTS WHOSE PART NUMBERS APPEAR AS SHOWN IN THIS MANUAL OR IN SUPPLEMENTS PUBLISHED BY SONY.

http://cxema.ru

TABLE OF CONTENTS

Section	Title	Page
	SELF DIAGNOSIS FUNCTION	4
1.	**GENERAL**	8
2.	**DISASSEMBLY**	
2-1.	3D Speaker Box Removal	27
2-2.	Rear Cover Removal	27
2-3.	Speaker Removal	27
2-4.	Chassis Assy Removal	27
2-5.	F Bracket Removal	28
2-6.	Service Position	28
2-7.	Replacement of Parts	28
2-7-1.	Replacement of Control Button	28
2-7-2.	Replacement of Light Guide	28
2-8.	D1 Board Removal	29
2-9.	PWB Holder Removal	29
2-10.	Terminal Bracket Removal	29
2-11.	H3 Board Removal	29
2-12.	P1 Board Removal	30
2-13.	A and B3 Boards Removal	30
2-14.	Picture Tube Removal	30
3.	**SET-UP ADJUSTMENTS**	
3-1.	Beam Landing	32
3-2.	Convergence	33
3-3.	Focus Adjustment	35
3-4.	G2 (Screen) and White Balance Adjustments	36
4.	**CIRCUIT ADJUSTMENT**	
4-1.	Adjustments with Commander	37
4-2.	Adjustment Method	38
4-3.	Picture Quality Adjustments	43
4-4.	Display Position Adjustment	43
4-5.	A Board Adjustment After IC003 (Memory) Replacement	43
4-6.	Picture Distortion Adjustment	44
5.	**DIAGRAMS**	
5-1.	Block Diagram	47
5-2.	Frame Schematic Diagram	51
5-3	Circuit Boards Location	55
5-4.	Schematic Diagrams and Printed Wiring Boards	56
(1)	Schematic Diagram of A (1/2) Board	59
(2)	Schematic Diagram of A (2/2) Board	63
(3)	Schematic Diagrams of F and J2 Boards	67
(4)	Schematic Diagram of B3 Board	71
(5)	Schematic Diagram of C Board	79
(6)	Schematic Diagram of P1 Board	83
(7)	Schematic Diagrams of B2 and H3 Boards	86
(8)	Schematic Diagram VM1 Board	91
(9)	Schematic Diagram D2 Board	93
5-5.	Semiconductors	90
6.	**EXPLODED VIEWS**	
6-1.	Speaker Bracket	99
6-2.	Chassis	100
6-3.	Picture Tube	101
6-4.	3D Speaker	102
7.	**ELECTRICAL PARTS LIST**	103

http://cxema.ru

SELF DIAGNOSTIC FUNCTION

The units in this manual contain a self-diagnostic function. If an error occurs, the STANDBY/TIMER lamp will automatically begin to flash.
The number of times the lamp flashes translates to a probable source of the problem. A definition of the STANDBY/TIMER lamp flash indicators is listed in the instruction manual for the user's knowledge and reference. If an error symptom cannot be reproduced, the remote commander can be used to review the failure occurrence data stored in memory to reveal past problems and how often these problems occur.

1. DIAGNOSTIC TEST INDICATORS

When an errors occurs, the STANDBY/TIMER lamp will flash a set number of times to indicate the possible cause of the problem. If there is more than one error, the lamp will identify the first of the problem areas.

Result for all of the following diagnostic items are displayed on screen. No error has occured if the screen displays a "0".

Diagnostic Item Description	No. of times STANDBY/TIMER lamp flashes	Self-diagnostic display/Diagnostic result	Probable Cause Location	Detected Symptoms
• Power does not turn on	Does not light	—	• Power cord is not plugged in. • Fuse is burned out F4601 (F)	• Power does not come on. • No power is supplied to the TV. • AC power supply is faulty.
• +B overcurrent (OCP) or overvoltage (OVP) • Vertical deflection stopped • Horizontal deflection overdrive	2 times	002:000 or 002:001~255 003:001~255 004:001~255 at the same time	• H.OUT Q511 is shorted. (A board) • IC701 is shorted. (C board) • -13V is not supplied. (A board) • IC 503 faulty (A board)	• Power does not come on. • Load on power line is shorted. • Has entered standby state after horizontal raster. • Vertical deflection pulse is stopped. • Power line is shorted or power supply is stopped.
• White balance failure (no PICTURE)	5 times	005:000 or 005:001~225	• G2 is improperly adjusted. (Note 2) • CRT problem. • Video OUT IC701 is faulty. (C board) • IC301 is faulty. (A board) • No connection A board to C board.	• No raster is generated. • CRT cathode current detection reference pulse output is small.
• Micro reset	—	101:00 or 101:001~225	• Discharge CRT (C Board) • Static discharge • External noise	• Power is shut down shortly, after this return back to normal. • Detect Micro latch up.

Note 1: If a + B overcurrent is detected, stoppage of the vertical deflection is detected simultaneously.
The symptom that is diagnosed first by the microcontroller is displayed on the screen.
Note 2: Refer to screen (G2) Adjustment in section 3-4 of this manual.

http://cxema.ru

2. DISPLAY OF STANDBY/TIMER LIGHT FLASH COUNT

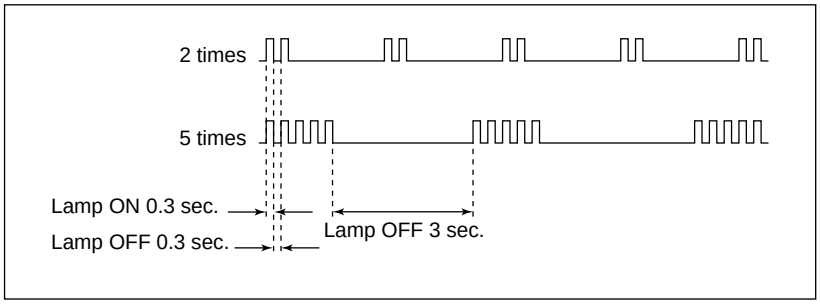

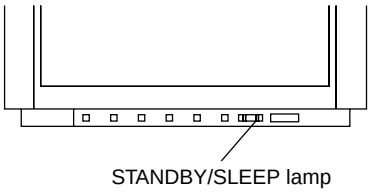

Diagnostic Item	Flash Count*
+B overcurrent/overvoltage Vertical deflection stopped	2 times
White balance failure	5 times

* One flash count is not used for self-diagnostic.

3. STOPPING THE STANDBY/TIMER FLASH

Turn off the power switch on the TV main unit or unplug the power cord from the outlet to stop the STANDBY/TIMER lamp from flashing.

http://cxema.ru

4. SELF-DIAGNOSTIC SCREEN DISPLAY

For errors with symptoms such as “power sometimes shuts off” or “screen sometimes goes out” that cannot be confirmed, it is possible to bring up past occurances of failure for confirmation on the screen:

[To Bring Up Screen Test]
In standby mode, press buttons on the remote commander sequentially in rapid succession as shown below:

Screen display ➡ channel 5 ➡ Sound volume - ➡ Power ON
⇧
Note that this differs from entering the service mode (mode volume +).

Self-Diagnosis screen display

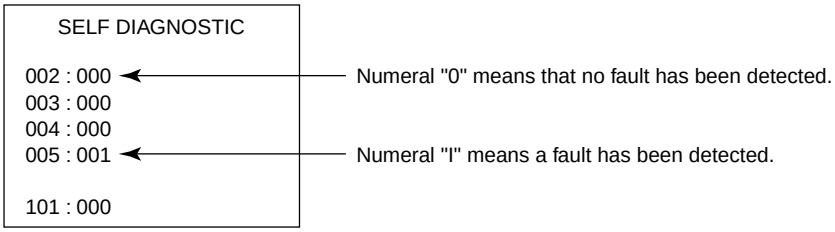

5. HANDLING OF SELF-DIAGNOSTIC SCREEN DISPLAY

Since the diagnostic results displayed on the screen are not automatically cleared, always check the self-diagnostic screen during repairs. When you have completed the repairs, clear the result display to “0”.

Unless the result display is cleared to “0”, the self-diagnostic function will not be able to detect subsequent faults after completion of the repairs.

[Clearing the result display]
To clear the result display to “0”, press buttons on the remote commander sequentially as shown below when the diagnostic screen is being displayed.

Channel 8 ➡ 0

[Quitting Self-diagnostic screen]
To quit the entire self-diagnostic screen, turn off the power switch on the remote commander or the main unit.

http://cxema.ru

6. SELF-DIAGNOSTIC CIRCUIT

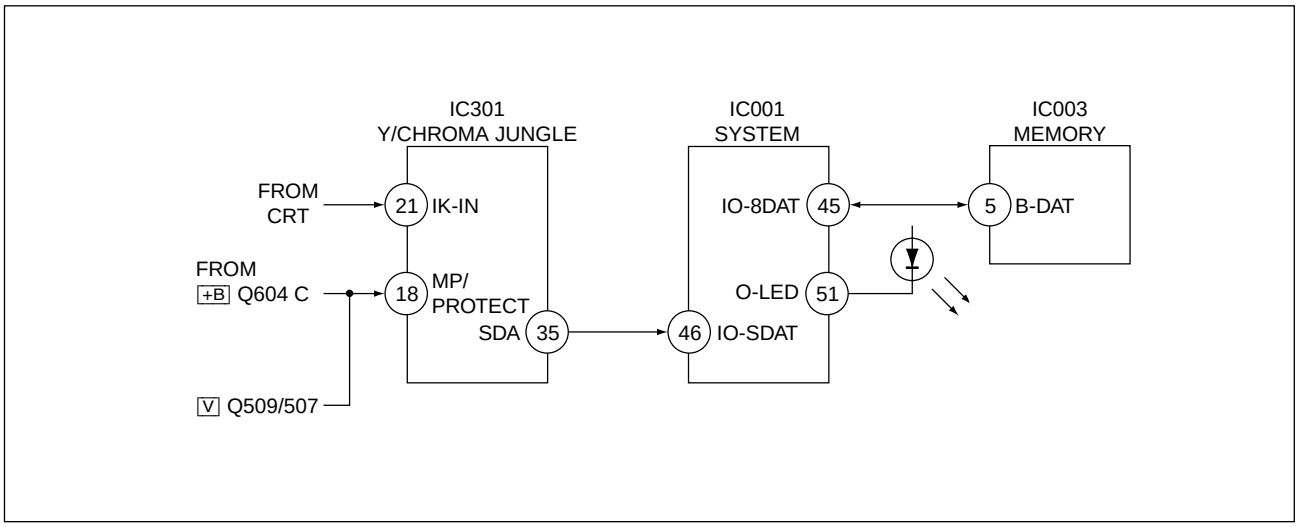

+B overcurrent (OCP)	Occurs when an overcurrent on the +B(135) line is detected by Q604. If Q604 go to ON and the voltage to pin 18 of IC301 should go down when V.SYNC is more than seven verticals in a period, the unit will automatically turn off.
Vertical deflection stopped	Occurs when an absence of the vertical deflection pulse is detected by Q509 and IC001 shut down the power supply.
Vertical deflection overcurrent	Occurs when an overcurrent on V drive line is detected by Q507. Power supply will be shut down when detect this by IC001.
White balance failure	If the RGB levels* do not balance or become low level within 5 seconds, this error will be detected by IC301. TV will stay on, but there will be no picture. * (Refers to the RGB levels of the AKB detection Ref pulse that detects IK.)

http://cxema.ru

The operating instructions mentioned here are partial abstracts from the Operating Instruction Manual. The page numbers of the Operating Instruction Manual remain as in the manual.

SECTION 1
GENERAL

WARNING

- Dangerously high voltages are present inside the TV.
- TV operating voltage: 110 – 240 V AC.

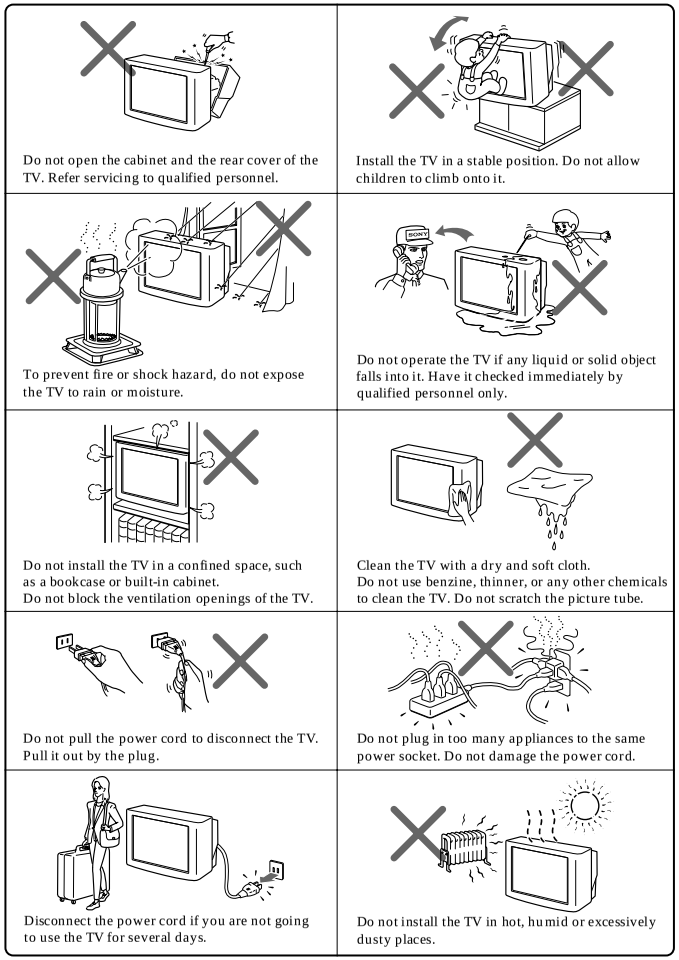

Do not open the cabinet and the rear cover of the TV. Refer servicing to qualified personnel.

Install the TV in a stable position. Do not allow children to climb onto it.

To prevent fire or shock hazard, do not expose the TV to rain or moisture.

Do not operate the TV if any liquid or solid object falls into it. Have it checked immediately by qualified personnel only.

Do not install the TV in a confined space, such as a bookcase or built-in cabinet.
Do not block the ventilation openings of the TV.

Clean the TV with a dry and soft cloth.
Do not use benzine, thinner, or any other chemicals to clean the TV. Do not scratch the picture tube.

Do not pull the power cord to disconnect the TV. Pull it out by the plug.

Do not plug in too many appliances to the same power socket. Do not damage the power cord.

Disconnect the power cord if you are not going to use the TV for several days.

Do not install the TV in hot, humid or excessively dusty places.

Using Your New TV

Getting Started

Step 1

Connect the antenna

If you wish to connect a VCR, see the "Connecting a VCR" diagram below.

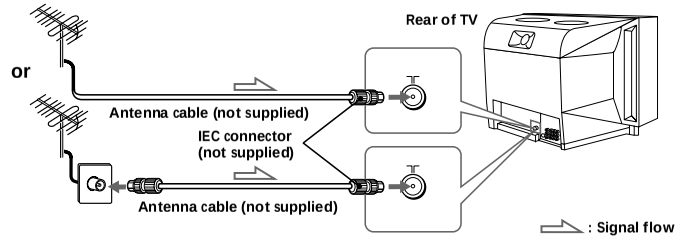

CAUTION
Do not connect the power cord until you have completed making all other connections; otherwise a minimum leakage current might flow through the antenna and other terminals to ground.

Connecting a VCR

To watch the video, press (see page 10).

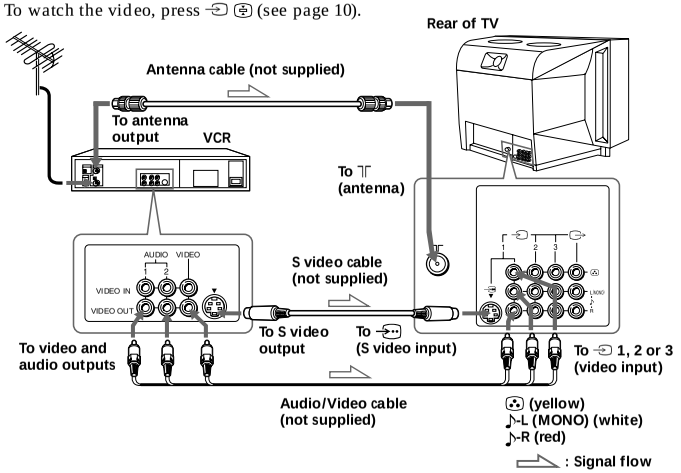

http://cxema.ru

Notes

- If you connect a monaural VCR, connect the yellow plug to (the yellow jack) and the black plug to L (MONO) (the white jack).
- If you connect a VCR to the (antenna) terminal, preset the signal output from the VCR to the program number 0 on the TV.
- If both (S video input) and 1 (video input) at the rear of your TV are input at the same time, the (S video input) is automatically selected. To view 1 (video input), disconnect the S video cable.
- Do not connect video equipment to 3 (video input) at the front and the rear of your TV at the same time; otherwise the picture will not be displayed properly on the screen.
- When no signal is input to the connected video equipment, the TV screen becomes blue.

Step 2

Insert the batteries into the remote

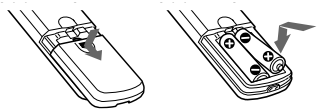

Note

- Do not use old batteries nor use different types of batteries together.

Step 3

Preset the channels automatically

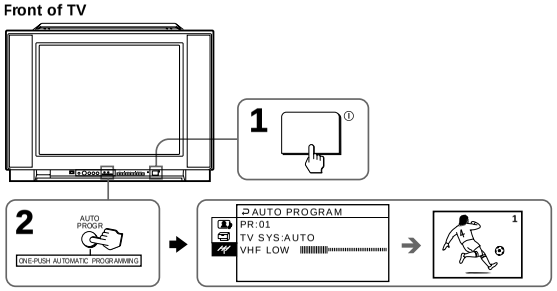

Tip

- If you want to stop the automatic channel presetting, press MENU twice.

Now You Are Ready. . .

To watch your TV, see page 9.

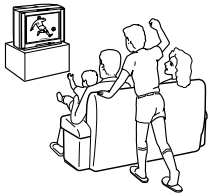

Connecting the 3D WOOFER

You can enjoy high quality sound by connecting the 3D WOOFER.

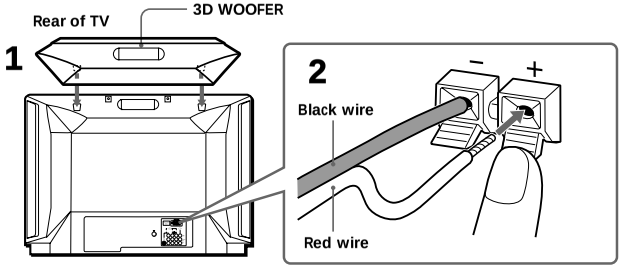

1 Attach the 3D WOOFER into the footholds on the top of your TV.

2 Connect the wires to the 3D WOOFER (8 Ω) terminals at the rear of your TV. The red wire should be connected to the ⊕ red terminal and the black wire to the ⊖ black terminal.

Notes

- Connect only the supplied 3D WOOFER; otherwise your TV may malfunction.
- Unplug your TV from the wall outlet when connecting the 3D WOOFER.
- To prevent a malfunction caused by a short circuit of the terminals, make sure that none of the 3D WOOFER wire strands stick out, making contact with the neighbouring speaker terminal.

http://cxema.ru

Connecting optional components

You can connect optional audio / video components, such as a VCR, multi disc player, camcorder, video game or stereo system.

To watch the picture of the connected equipment, press (see page 10).

Connecting a camcorder/video game equipment using the (video input) jacks

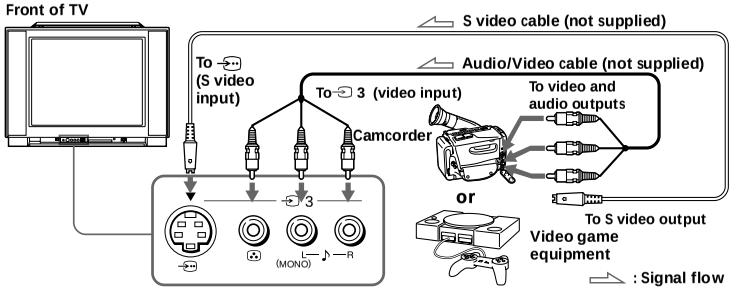

Notes

- You can also connect video equipment to the 1, 2 or 3 (video input) jacks at the rear of your TV.
- If both (S video input) and 3 (video input) at the front of your TV are input at the same time, the (S video input) is automatically selected. To view 3 (video input), disconnect the S video cable.

Connecting audio/video equipment using the (monitor output) jacks

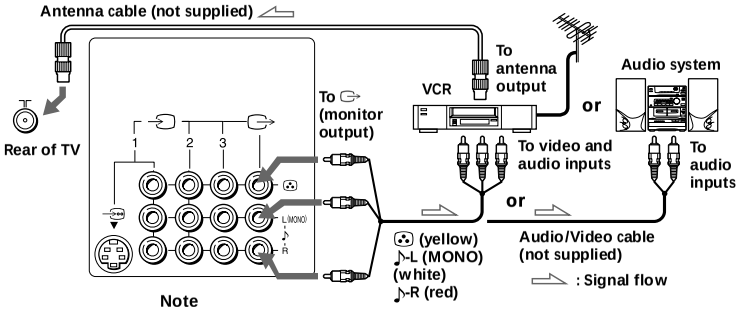

Note

- When connecting a monaural VCR, connect the yellow plug to (the yellow jack) and the black plug to L (MONO) (the white jack).

Securing the TV

To prevent the TV from falling, secure the TV using one of the following methods:

A With the supplied screws, attach the band to the TV stand and to the rear of the TV using the provided hole.

or

B Put the cord or chain through the clamps to secure the TV against a wall or pillar.

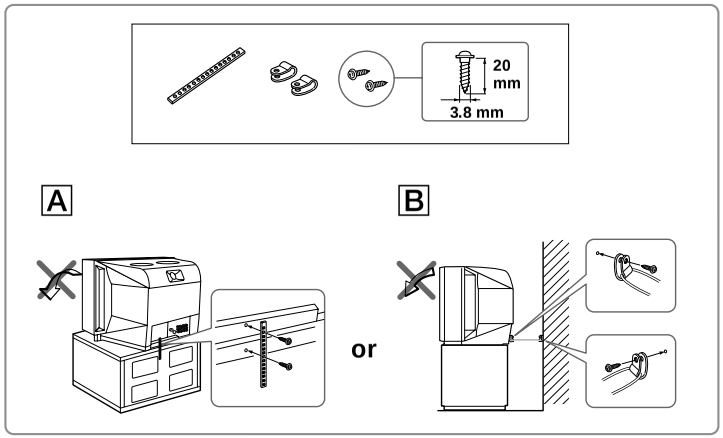

Note

- Use only the supplied screws. Use of other screws may damage the TV.

http://cxema.ru

Watching the TV

This section explains functions used while watching TV. Most operations can be done using the remote.

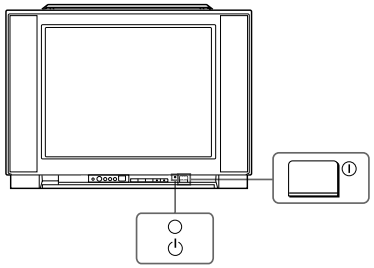

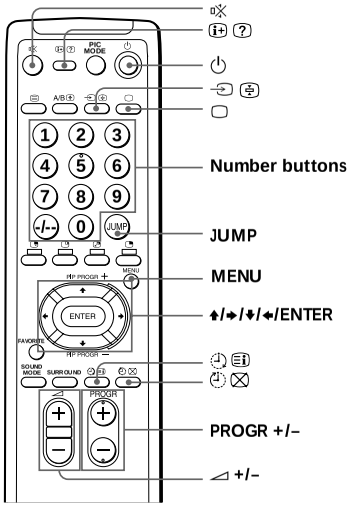

1 Press ⏻ to turn on the TV.

When the TV is in the standby mode (the ⏻ indicator on the TV is lit red), press ⏻ on the remote or PROGR + / – on the TV.

2 Press PROGR +/– or number buttons to select the TV program.

For double digit numbers, press -/--, then the number (e.g., for 25, press -/--, then 2 and 5).

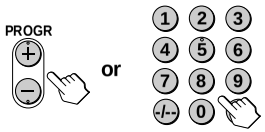

3 Press ◿ +/– to adjust the volume.

continued

Using Your New TV

Watching the TV (continued)

Additional tasks

To	Do this
Turn off temporarily	Press ⏻. The ⏻ indicator on the TV lights up red.
Turn off completely	Press ⏻ on the TV.
Mute the sound	Press 🔇.
Watch the video input (VCR, camcorder, etc.)	Press ⇥ ⊕ to select "VIDEO 1", "VIDEO 2" and "VIDEO 3". To return to the TV program, press ▢.
Jump back to the previous channel	Press JUMP.
Display the on-screen information*	Press ⓘ ⓘ.

* The picture, sound, and either the program number or video mode are displayed. The on-screen display for the picture and sound information disappears after about 3 seconds.

Changing the menu language

You can change the menu language as well as the on-screen language.

For details on how to use the menu, see "How to use the menu" on page 21.

1 Press MENU.

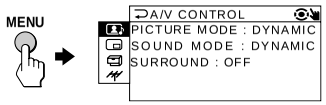

2 Press ↑ or ↓ to select the SET UP icon (⊟), then press ENTER.

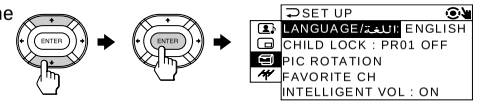

3 Make sure "LANGUAGE/ اللغة " is selected, then press ENTER.

4 Press ↑ or ↓ to select " عربي ", then press ENTER.
The menu language changes to Arabic.

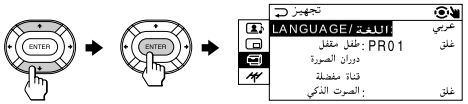

To return to the normal screen

Press MENU.

http://cxema.ru

Setting the Wake Up timer

1 Press ◷ until the desired period of time appears.

The Wake Up timer starts immediately after you have set it.

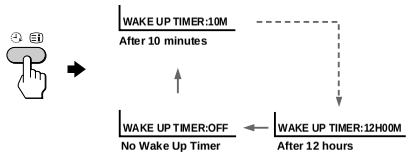

2 Select the TV program or video mode you want to display when you wake up.

3 Press ⏻ or set the Sleep timer if you want the TV to turn off automatically.

The ◷ indicator lights up orange.

To cancel the Wake Up timer

Press ◷ until "WAKE UP TIMER: OFF" appears or turn off the TV's main power.

Note

- If no buttons or controls are pressed for more than two hours after the TV is turned on using the Wake Up timer, the TV automatically goes into the standby mode. To continue watching the TV, press any button or control on the TV or the remote.

Setting the Sleep timer

Press ◷ ⊗ until the desired period of time appears.

The Sleep timer starts immediately after you have set it.

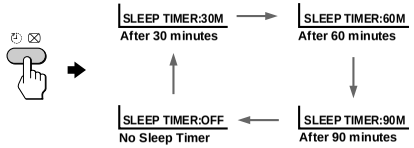

To cancel the Sleep timer

Press ◷ ⊗ until "SLEEP TIMER: OFF" appears or turn the TV off.

Selecting the picture and sound modes

You can select picture and sound modes and adjust the setting to your preference in PERSONAL option.

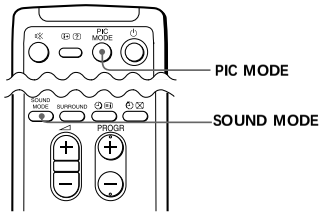

Selecting the picture mode

Press PIC MODE repeatedly until you get the desired picture mode.

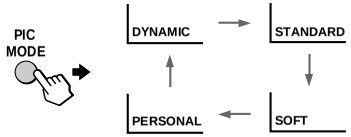

Select	To
DYNAMIC	receive high contrast pictures.
STANDARD	receive normal contrast pictures.
SOFT	receive mild pictures.
PERSONAL	receive the last adjusted picture setting from the ADJUST option in the A/V CONTROL menu (see page 22 and 23).

Selecting the sound mode

Press SOUND MODE repeatedly until you get the desired sound mode.

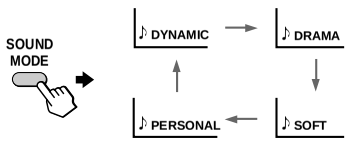

Select	To
DYNAMIC	listen to dynamic and clear sound that emphasizes the low and high tones.
DRAMA	listen to sound that emphasizes voice and high tones.
SOFT	receive soft sound.
PERSONAL	receive the last adjusted sound setting from the ADJUST option in the A/V CONTROL menu (see page 22 and 23).

Tip

- You can also set the picture and sound modes using the menu (see "Changing the A/V CONTROL setting" on page 22 and 23).

http://cxema.ru

http://cxema.ru

Viewing your favorite channels

You can display and select six of your favorite channels directly from your TV screen.

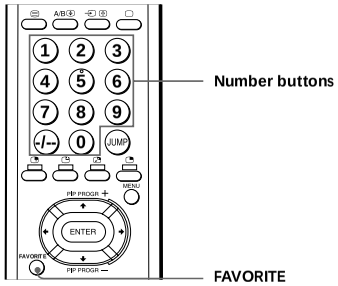

1 Press FAVORITE.

2 Press the number button from 1 to 6 to select the desired channel.

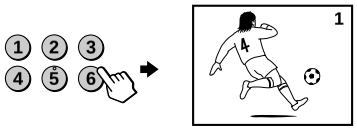

Tip

- To program your favorite channels, see "Programming your favorite channels" on page 26.

Watching two programs at the same time

—PIP

With the Picture-in-Picture (PIP) feature, you can display a different TV program or video directly within the main picture.

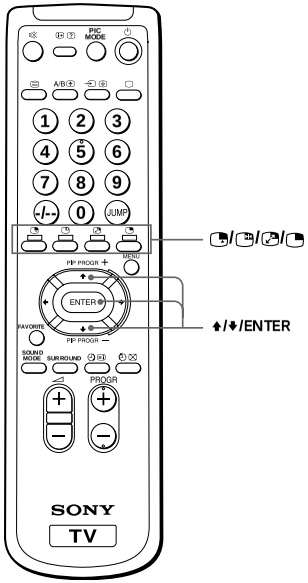

Displaying the PIP screen

Press .

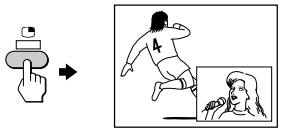

Additional PIP tasks

To	Press
change a TV program in the PIP screen	↑ or ↓, then press ENTER.
change a video input in the PIP screen	.
swap pictures between the main and PIP screens	.
freeze the PIP screen	. To unfreeze the screen, press the button again.

To return to the normal screen

Press .

Tips

- You can also display the PIP screen using the menu (see "Adjusting the PIP setting" on page 24).
- You can change the position of the PIP screen (see "Adjusting the PIP setting" on page 24).

Notes

- When you display a video input on the PIP screen at a faster/slower speed, the picture may be disrupted depending on the VCR type.
- If you display different color systems on the PIP screen, the size of the PIP screen may be different and the picture may be disrupted. This does not indicate a malfunction of the TV.

Listening with surround sound

The surround feature enables you to enjoy the sound effects of a concert hall or movie

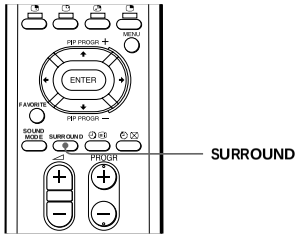

Press SURROUND repeatedly until you receive the desired surround sound.

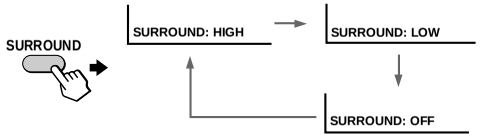

Select	To
HIGH	listen to sound that spreads out over a large area, giving the feeling of being at a concert hall.
LOW	listen to the sound that gives the feeling of being at a live concert.
OFF	turn off the surround sound.

The surround of your TV is categorized as TruSurround.

TruSurround™ is a trademark of SRS Labs, Inc. SRS and the SRS symbol are registered trademarks of SRS Labs, Inc. in the United States and selected foreign countries. SRS and TruSurround are incorporated under license from SRS Labs, Inc. and are protected under United States Patent Nos. 4,748,669 and 4,841,572 with numerous additional issued and pending foreign patents.

http://cxema.ru

Selecting a stereo or bilingual program

You can enjoy stereo sound or bilingual programs of NICAM and A2 (German) stereo systems.

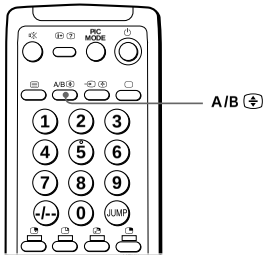

Press A/B repeatedly until you receive the sound you want.

The on-screen display changes to show the selected sound and the indicator on the TV lights up red.

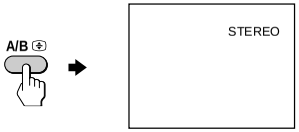

When receiving a NICAM program

Broadcasting	On-screen display (Selected sound)
NICAM stereo	NICAM (Stereo sound) → MONO (Regular sound)
NICAM bilingual	NICAM MAIN (Main sound) → NICAM SUB (Sub sound) → MONO (Regular sound)
NICAM monaural	NICAM MAIN (Main sound) → MONO (Regular sound)

continued

Selecting a stereo or bilingual program (continued)

When receiving an A2 (German) program

Broadcasting	On-screen display (Selected sound)
A2 (German) stereo	MONO (Regular sound) → STEREO (Stereo sound)
A2 (German) bilingual	MAIN (Main sound) → SUB (Sub sound)

Notes
- If the signal is very weak, the sound becomes monaural automatically.
- If the stereo sound is noisy when receiving a NICAM program, select "MONO". The sound becomes monaural, but the noise is reduced.

If the sound is distorted or noisy when receiving a monaural program through the ⊤ (antenna) terminal

Press A/B repeatedly until "MONO" appears on the screen.

To cancel the monaural sound setting, press A/B again until "AUTO" appears on the screen.

Notes
- The "MONO" or "AUTO" setting is memorized for each program position.
- You cannot receive stereo broadcast signal when the TV is in the "MONO" setting. Normally set the TV to "AUTO".

http://cxema.ru

Adjusting Your Setup (MENU)

Introducing the menu system

The MENU button lets you open a menu and change the settings of your TV. Here's an overview of the menu system.

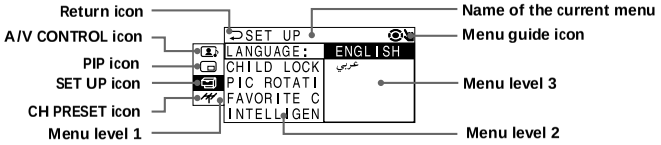

Level 1	Level 2	Level 3/Function
A/V CONTROL	PICTURE MODE	Select the picture mode. DYNAMIC → STANDARD → SOFT → PERSONAL → ADJUST
	ADJUST	Adjust the PERSONAL option. PICTURE → COLOR → BRIGHT→ HUE→ SHARP
	SOUND MODE	Select the sound mode. DYNAMIC → DRAMA → SOFT → PERSONAL → ADJUST
	ADJUST	Adjust the PERSONAL option. BASS→ TREBLE → BALANCE→ BBE*
	SURROUND	Select the surround mode. HIGH→ LOW → OFF
PIP	PIP POSITION	Change the position of the PIP screen.
	PIP	Display a sub screen within the main picture.
	SWAP	Exchange program between main screen and sub screen.
SET UP	LANGUAGE	Change the menu language. ENGLISH - عربي (Arabic)
	CHILD LOCK	Lock the channel independently.
	PIC ROTATION	Adjust the picture position.
	FAVORITE CH	Program favorite channels.
	INTELLIGENT VOL	Adjust volume automatically.

continued

Introducing the menu system (continued)

Level 1	Level 2	Level 3/Function
CH PRESET	AUTO PROGRAM	Preset channels automatically.
	MANUAL PROGRAM	Preset channels manually.
	SKIP	Skip unwanted or unused program positions.
	TV SYS	Select the TV system. B/G, I, D/K, M
	COL SYS	Select the color system. AUTO → PAL→ SECAM → NTSC3.58 → NTSC4.43

* The BBE is manufactured by Sony Corporation under license from BBE Sound, Inc. It is covered by U.S. Patent No. 4,638,258 and No. 4,482,866. The word "BBE" and the BBE symbol are the trademarks of BBE Sound, Inc.

http://cxema.ru

How to use the menu

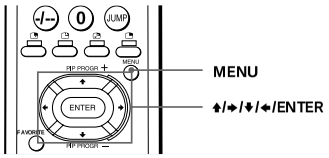

You can use the buttons on the remote and on the TV as well to display the menu and adjust the settings.

1 Press MENU to display the menu.

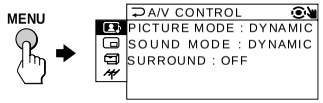

2 Press ↑ or ↓ to select the desired item.

3 Press ENTER to confirm your option and go to the next menu level.

Other menu operations

To	Press
Adjust the setting value	↑, →, ↓ or ←
Move to the next/previous menu level*	→ or ←
Cancel the menu	MENU

Note

- If more than 60 seconds elapse between entries, the menu screen automatically disappears.

Tips

- If you want to exit from Menu Level 2 to Menu Level 1, press ↑ or ↓ until the return icon ( ) is highlighted, then press ENTER.
- You can also use the buttons on the TV for menu operations. + / – works as ↑ or ↓ on the remote and works as ENTER on the remote.

Front of TV

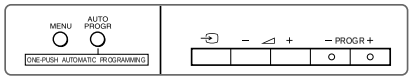

Changing the A/V CONTROL setting

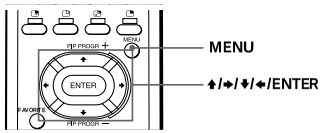

The A / V CONTROL menu allows you to change the picture and sound settings.

1 Press MENU.

2 Make sure the A/V CONTROL icon ( ) is selected, then press ENTER.

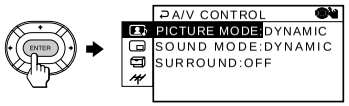

3 Press ↑ or ↓ to select either PICTURE MODE, SOUND MODE, or SURROUND, then press ENTER.

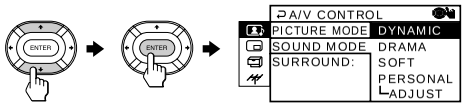

4 Press ↑ or ↓ to select the desired option, then press ENTER.

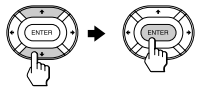

For	Select
PICTURE MODE	either DYNAMIC, STANDARD, SOFT, PERSONAL*, or ADJUST.
SOUND MODE	either DYNAMIC, DRAMA, SOFT, PERSONAL*, or ADJUST.
SURROUND	either HIGH, LOW, or OFF.

* When the PERSONAL mode is selected, the last adjusted picture and sound settings from the ADJUST option are received.

Tip

- For details on the options under "PICTURE MODE", "SOUND MODE" and "SURROUND", see page 12 and 16 respectively.

To return to the normal screen

Press MENU.

http://cxema.ru

Adjusting the ADJUST options under PICTURE MODE

1 Press ↑ or ↓ to select the desired item (e.g., COLOR), then press ENTER.

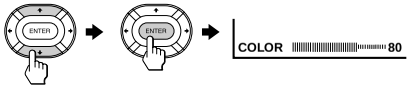

2 Adjust the value according to the following table, then press ENTER.

For	Press ↓/← to	Press ↑/→ to
PICTURE	decrease picture contrast	increase picture contrast
COLOR	decrease color intensity	increase color intensity
BRIGHT	darken the picture	brighten the picture
HUE*	increase red picture tones	increase green picture tones
SHARP	soften the picture	sharpen the picture

* You can adjust HUE for the NTSC color system only.

3 Repeat the above steps to adjust other items.

The adjusted settings will be received when you select PERSONAL.

Adjusting the ADJUST options under SOUND MODE

1 Press ↑ or ↓ to select the desired item (e.g., BALANCE), then press ENTER.

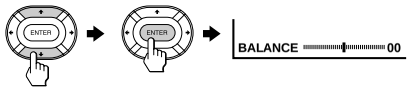

2 Adjust the value according to the following table, then press ENTER.

For	Press ↓/← to	Press ↑/→ to
BASS	decrease the bass	increase the bass
TREBLE	decrease the treble	increase the treble
BALANCE	increase the left speaker's volume	increase the right speaker's volume
BBE	select "HIGH" for higher enhancement of sound clarity; select "LOW" for lower enhancement of sound clarity; select "OFF" to turn off the BBE sound	

3 Repeat the above steps to adjust other items.

The adjusted settings will be received when you select PERSONAL.

Tip

- For details on the menu system and how to use the menu, refer to "Introducing the menu system" on page 19 and "How to use the menu" on page 21.

Adjusting the PIP setting

With the Picture-In-Picture (PIP) feature, you can display a sub screen within the main picture of different TV programs or video inputs.

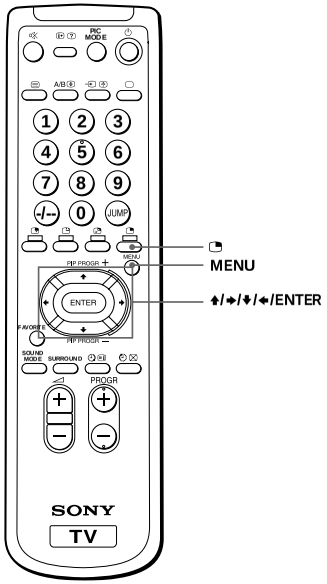

1 Press MENU.

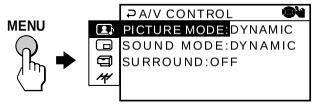

2 Press ↑ or ↓ to select the PIP icon ( ), then press ENTER.

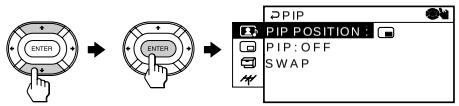

3 Press ↑ or ↓ to select the desired option, then press ENTER.

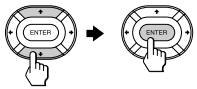

http://cxema.ru

Select	To
POSITION	change the position of the PIP screen. Press ↑ or ↓ to select the desired position, then press ENTER.
PIP	display a sub screen within the main picture. Press ↑ or ↓ to select "ON", then press ENTER. To cancel, press or select "PIP : OFF", then press ENTER.
SWAP	exchange program between main screen and sub-screen.

To return to the normal screen

Press MENU.

Tip

- For details on the menu system and how to use the menu, refer to "Introducing the menu system" on page 19 and "How to use the menu" on page 21.

Changing the SET UP setting

The SET UP menu allows you to change the menu language, lock channels, adjust the picture position, program your favorite channels and adjust volume automatically.

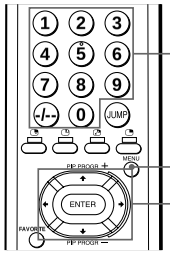

Programming your favorite channels

The FAVORITE CH feature enables you to program up to six channels for direct selection.

1 Press MENU.

2 Press ↑ or ↓ to select the SET UP icon (), then press ENTER.

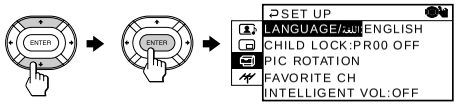

3 Press ↑ or ↓ to select FAVORITE CH, then press ENTER twice.

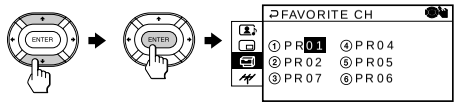

4 Press ↑ or ↓, or number buttons to program the desired channel (e.g., PR03), then press ENTER.

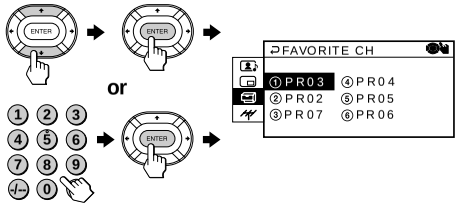

5 To continue programming other favorite channels, press ↑ or ↓ and then press ENTER. After that, repeat step 4.

To return to the normal screen

Press MENU.

http://cxema.ru

Using the CHILD LOCK feature

You can prevent your children from watching certain channels by using the CHILD LOCK feature.

1 Press MENU.

2 Press ↑ or ↓ to select the SET UP icon (), then press ENTER.

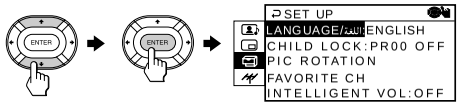

3 Press ↑ or ↓ to select CHILD LOCK, then press ENTER.

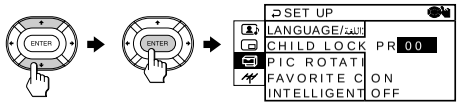

4 Press ↑ or ↓, or number buttons to select the desired channel, then press ENTER.

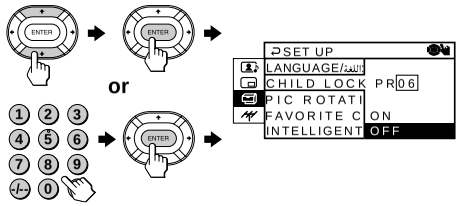

5 Press ↑ or ↓ to select ON, then press ENTER.

The lock symbol ( ) appears on the screen.

To unlock the channel, select OFF.

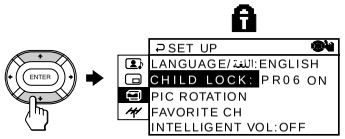

6 To continue locking other channels, press ENTER and then repeat step 4 to 5.

To return to the normal screen

Press MENU.

continued

Changing the SET UP setting (continued)

Changing other SET UP menu options

1 Press MENU.

2 Press ↑ or ↓ to select the SET UP icon (), then press ENTER.

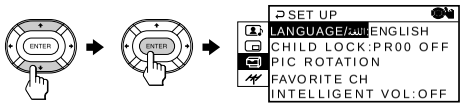

3 Press ↑ or ↓ to select the desired option (e.g., INTELLIGENT VOL), then press ENTER.

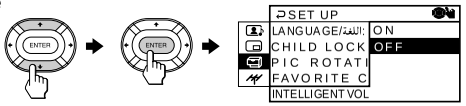

Select	To
LANGUAGE/ اللغة	Change the menu language (see "Changing the menu language" on page 10).
CHILD LOCK	Prevent children from watching certain channels (see "Using the CHILD LOCK feature" on page 26).
PIC ROTATION	Adjust the picture position when it is not aligned to the TV screen. Press ↑, →, ↓ or ← to adjust the picture position, then press ENTER.
FAVORITE CH	Program channels for direct selection (see "Programming your favorite channels" on page 25).
INTELLIGENT VOL	Adjust the volume of each program automatically. Press ↑ or ↓ to select "ON", then press ENTER. To turn off the Intelligent Volume function, select "OFF", then press ENTER.

To return to the normal screen

Press MENU.

Tip

- For details on the menu system and how to use the menu, refer to "Introducing the menu system" on page 19 and "How to use the menu" on page 21.

http://cxema.ru

Changing the Channel Preset (CH PRESET) setting

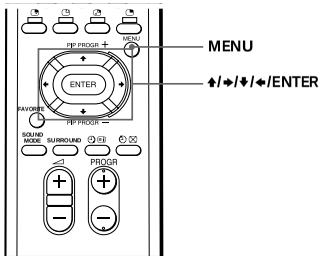

The CH PRESET menu allows you to adjust the setup of your TV. For example, you can receive a channel with a weak signal that fails to be tuned in by automatic presetting.

Presetting channels manually

1 Press MENU.

2 Press ↑ or ↓ to select the CH PRESET icon (), then press ENTER.

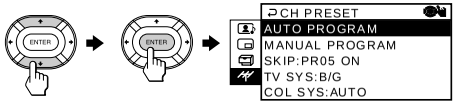

3 Press ↑ or ↓ to select MANUAL PROGRAM, then press ENTER.

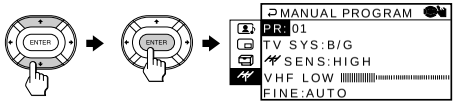

4 Select the program number to which you want to preset a channel.

(1) Make sure "PR" is selected , then press ENTER.

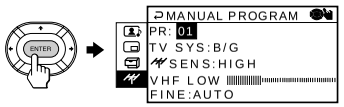

(2) Press ↑ or ↓ until the program number you want to preset (e.g., program number 10) appears on the menu, then press ENTER.

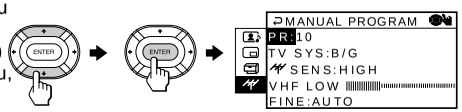

continued

Changing the Channel Preset (CH PRESET) setting (continued)

5 Select the desired channel.

(1) Press ↑ or ↓ to select either VHF LOW, VHF HIGH or UHF, then press ENTER.

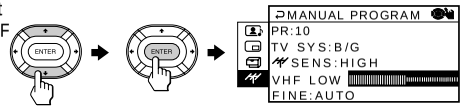

(2) Press ↑ or ↓ until the desired channel picture appears on the TV screen, then press ENTER.

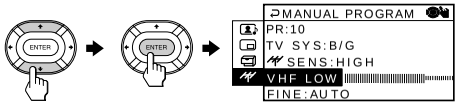

6 If the sound of the desired channel is abnormal, select the appropriate TV system.

(1) Press ↑ or ↓ to select TV SYS, then press ENTER.

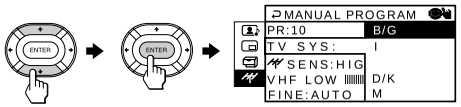

(2) Press ↑ or ↓ until the sound becomes normal (e.g., M), then press ENTER.

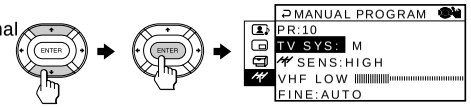

http://cxema.ru

7 If you are not satisfied with the picture and sound quality, you may improve them by using fine tuning.

(1) Press ↑ or ↓ to select FINE, then press ENTER.

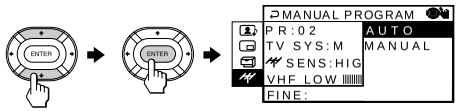

(2) Press ↑ or ↓ to select MANUAL, then press ENTER.

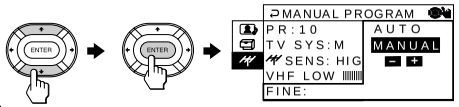

(3) Press ↑, →, ↓ or ← until you are satisfied with the picture and sound quality, then press ENTER.

The + or – icon on the menu flashes while tuning.

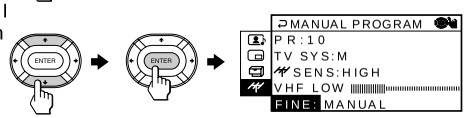

8 If the TV signal is too strong and the picture is distorted, you may reduce the TV receiving sensitivity.

(1) Press ↑ or ↓ to select SENS, then press ENTER.

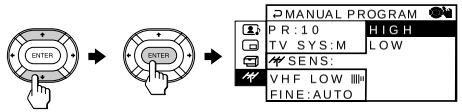

(2) Press ↑ or ↓ to select LOW, then press ENTER.

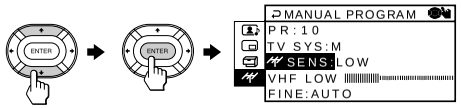

To return to the normal screen

Press MENU.

Notes

- If you preset a locked channel, that particular channel will be unlocked automatically (see page 27).
- The TV system (TV SYS), SENS and the fine tuning (FINE) settings are memorized for each program number.

continued

Changing the Channel Preset (CH PRESET) setting (continued)

Changing other CH PRESET menu options

1 Press MENU.

2 Press ↑ or ↓ to select the CH PRESET icon ( ), then press ENTER.

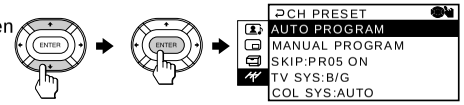

3 Press ↑ or ↓ to select the desired option (e.g., SKIP), then press ENTER.

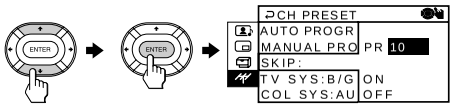

Select	To
AUTO PROGRAM	preset channels automatically.
MANUAL PROGRAM	preset channels manually. See "Presetting channels manually" on page 26 and 27.
TV SYS	select the TV system. See "Presetting channels manually" on page 26 and 27.
COL SYS	select the color system. Normally, set this to "AUTO".
SKIP	skip unwanted or unused program numbers. 1 Press ↑ or ↓ until the unused or unwanted program number appears, then press ENTER. 2 Press ↑ or ↓ to select "ON", then press ENTER. To put the skipped program number back on, select "OFF", then press ENTER.

Tip

- For details on the menu system and how to use the menu, refer to "Introducing the menu system" on page 19 and "How to use the menu" on page 21.

Note

- If you preset a locked channel, that particular channel will be unlocked automatically.

http://cxema.ru

Self-diagnosis function

Your TV is equipped with a self-diagnosis function. If there is a problem with your TV, the u indicator flashes red. The number of times the u indicator flashes indicates the possible causes.

Front of TV

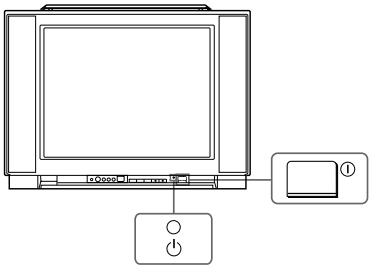

1. Check that the red flashes of the ⏻ indicator is about 3 seconds per interval.
2. Count the number of times the ⏻ indicator flashes.
3. Press ⏀ (main power) to turn off your TV.
4. Inform your nearest Sony service center about the number of times the ⏻ indicator flashes.
   Be sure to note the model name and serial number located on the rear of your TV.

Troubleshooting

If you find any problem while viewing your TV, please check the following guide. If any problem persists, contact your Sony dealer.

Symptom	Solutions	Possible cause
Snowy picture 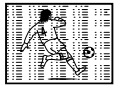 Noisy sound	• Check the antenna cable and connection on the TV, VCR and on the wall. (page 4)	• Connection is loose or the cable is damaged.
	• Display the CH PRESET menu and select "MANUAL PROGRAM" to preset the channel again. (page 29 and 30)	• Channel presetting is inappropriate or incomplete.
	• Check the antenna type (VHF/UHF). Contact a Sony dealer for advice.	• The antenna type is inappropriate.
	• Adjust the antenna direction. Contact a Sony dealer for advice.	• The antenna direction is inappropriate.
	• Try using a booster.	• Signal transmission is low.
Distorted picture Noisy sound	• Display the CH PRESET menu and select "MANUAL PROGRAM". Then, select "⚡ SENS: ON". (page 22) • Turn off or disconnect the booster if it is in use.	• Broadcast signals are too strong.
Good picture Noisy sound	• If the sound of all the channels are noisy, display the CH PRESET menu and select the appropriate TV system (page 30), then select "AUTO PROGRAM" to preset the channels again. (page 32) • If the sound of some channels are noisy, select the channel, then display the CH PRESET menu and select the appropriate TV system. (page 30)	• The TV system setting is inappropriate.
No picture No sound 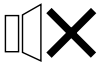	• Check the power cord, antenna and the VCR connections.	• The power cord, antenna or VCR is not connected.
	• Press ⏻ (power). • Press ⏀ (main power) on the TV to turn off the TV about five seconds, then turn it on again.	• The TV is not turned on.

http://cxema.ru

Symptom	Solutions	Possible cause
Good picture	• Press ◿ + to increase the volume level.	• The volume level is too low.
	• Press 🔇 to cancel the muting.	• The sound is muted.
No sound	• Press A/B ⊕ until a good sound is heard.	• Broadcast signal has a transmission problem.
Dotted lines or stripes	• Do not use a hair dryer or other equipment near the TV. • Adjust the antenna direction for minimum interference. Contact a Sony dealer for advice.	• There is local interference from cars, neon signs, hair dryers, power generators, etc.
Double images or "ghosts"	• Use a highly directional antenna.	• Broadcast signals are reflected by nearby mountains or buildings.
	• Adjust the antenna direction. Contact a Sony dealer for advice.	• The antenna direction is inapproprite.
	• Turn off or disconnect the booster if it is in use.	• Use of a booster is inappropriate.
No color	• Display the A/V CONTROL menu and select "ADJUST" of PICTURE MODE, then adjust the COLOR level. (page 22 and 23)	• The color level setting is too low.
	• Display the CH PRESET menu and check the color system (COL SYS) setting (usually set this to AUTO). (page 32)	• The color system setting is inappropriate.
	• Adjust the antenna direction. Contact a Sony dealer for advice.	• The antenna direction is inapproriate.
Abnormal color patches	• Keep external speakers or other electrical equipment away from the TV. Do not move the TV while the TV is turned on. Press ⏻ (main power) on the TV to turn off the TV for about five minutes, then turn it on again.	• There are magnetic effects from external speakers or other electrical equipment that may affect the TV. • The direction of the earth's magnetic field may affect the TV.
TV cannot receive stereo broadcast signal.	• Press A/B ⊕ until "AUTO" appears on the screen.	• The stereo reception setting is inappropriate.

Symptom	Solutions	Possible cause
Stereo broadcast sound switches on and off or is distorted. **or** The sound switches between monaural and stereo frequently.	• Check the antenna cable and connection on the TV, VCR and on the wall. (page 4)	• Connection is loose or the cable is damaged.
	• Adjust the antenna direction. Contact a Sony dealer for advice.	• The antenna direction is inappropriate.
	• Press A/B ⊕ until a good sound is heard.	• Broadcast signal has a transmission problem.
Picture slant	• Keep external speakers or other electrical equipment away from the TV. • Display the SET UP menu and adjust "PIC ROTATION" so that the picture is aligned to the TV screen. (page 28)	• The magnetic disturbance from external speakers or other equipment, or the direction of the earth's magnetic field may affect the TV.
The ⏻ indicator on your TV flashes red for about 3 seconds per interval.	• Contact your nearest Sony service center.	• Your TV may need service.
TV cabinet creaks.	—	• Changes in room temperature sometimes make the TV cabinet expand or contract, making a noise. This does not indicate a malfunction.
A "boom" sound is heard when the TV is turned on.	—	• The TV's demagnetizing function is working. This does not indicate a malfunction.

http://cxema.ru

http://cxema.ru

Identifying parts and controls

Refer to the pages indicated in parentheses ( ) for details.

Front panel

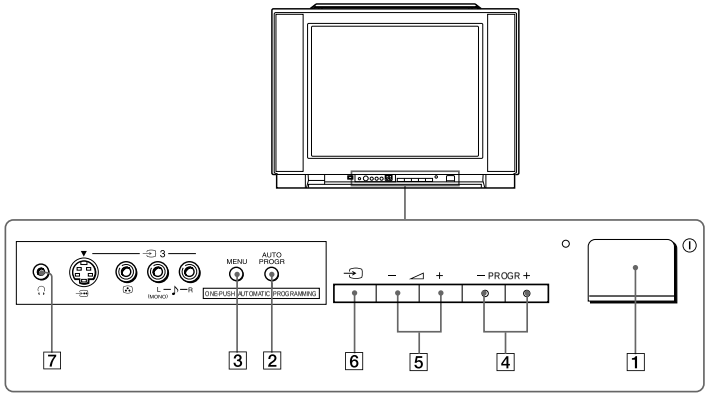

1. ⏻ (main power) button (9)
2. AUTO PROGR (auto program) button (5)
3. MENU button (21)
4. PROGR +/– (program) buttons (9)
5. ◿ +/– (volume) buttons (9)
6. ⇥ (TV/video) button (10)
7. 🎧 (Headphone) jack

Remote Control

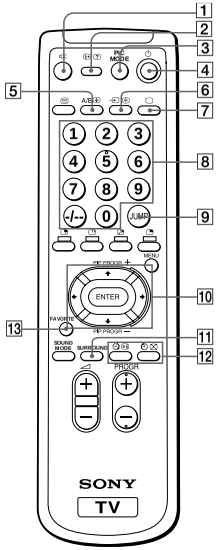

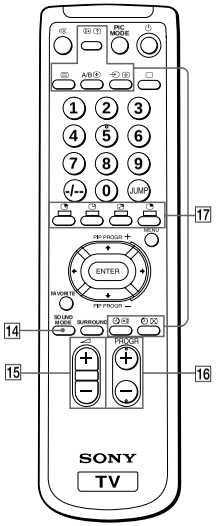

1. 🔇 (muting) button (10)
2. ⓘ (display) button (10)
3. PIC MODE button (12)
4. ⏻ (power) button (9)
5. A/B button (15)
6. ⇥ (video) button (10)
7. ▢ (TV) button (10)
8. Number buttons (10)
9. JUMP button (10)
10. Menu operation buttons (21)
    MENU button
    ↑/→/↓/← buttons
11. SURROUND button (16)
12. Timer setting buttons (11)
    ⏲ (wake up timer)
    ⏱ (sleep timer)
13. FAVORITE button (13)
14. SOUND MODE button (12)
15. ◿ (volume) +/– buttons (9)
16. PROGR +/– button (9)
17. Teletext operation buttons (not used for KV-XF29M97/XF29M67/XF25M97/XF25M67)
    (text) — yellow
    (enlarge) — blue
    (reveal) — ↑/→/↓/←/ENTER
    (hold) — (index)
    red — (text clear)
    green

Names/symbols of buttons on the remote are indicated in different colors to represent the available functions.

Label color	Button function
White	For general TV operations
Green	For Teletext operations
Yellow	For PIP operations

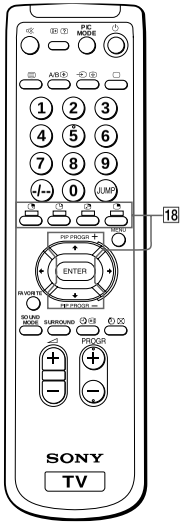

18 PIP operation buttons (24-25)
(TV/video)
(freeze)
(swap)
(PIP)
↑/↓ ENTER – for PIP PROGR

http://cxema.ru

SECTION 2
DISASSEMBLY

2-1. 3D SPEAKER BOX REMOVAL

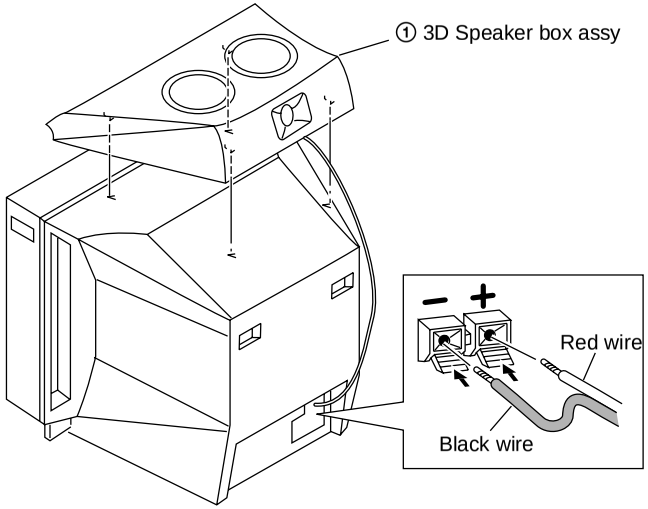

2-2. REAR COVER REMOVAL

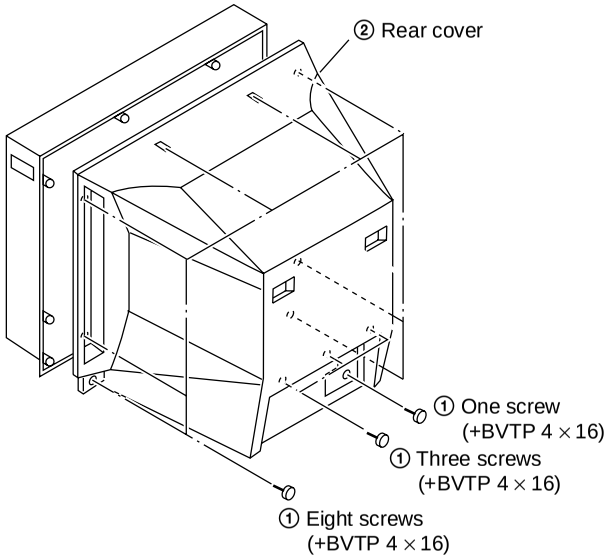

2-3. SPEAKER REMOVAL

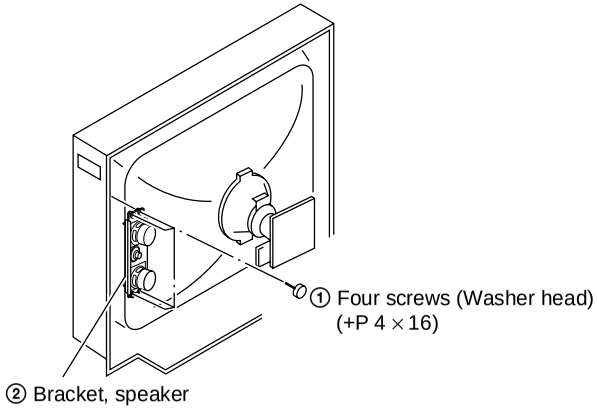

2-4. CHASSIS ASSY REMOVAL

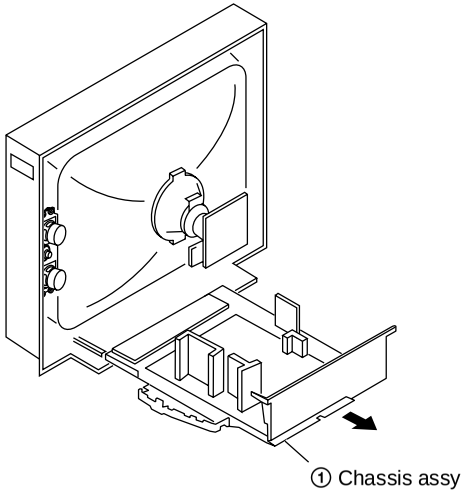

http://cxema.ru

2-5. F BRACKET REMOVAL

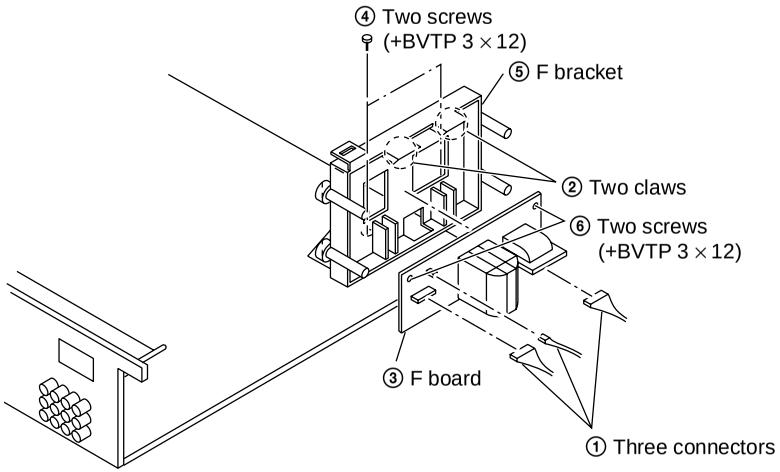

2-6. SERVICE POSITION

(Note: Remove F Bracket first.)

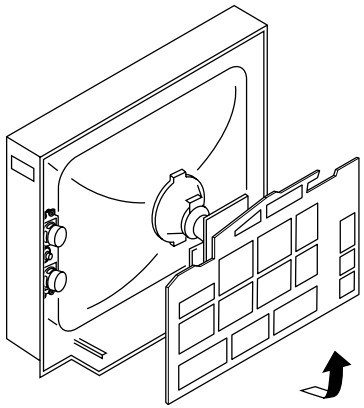

2-7. REPLACEMENT OF PARTS

For replacement of the Control Button and Light Guide, unscrew them, exchange with the new parts, and fix them with screws (+BVTP) respectively.

2-7-1. REPLACEMENT OF CONTROL BUTTON

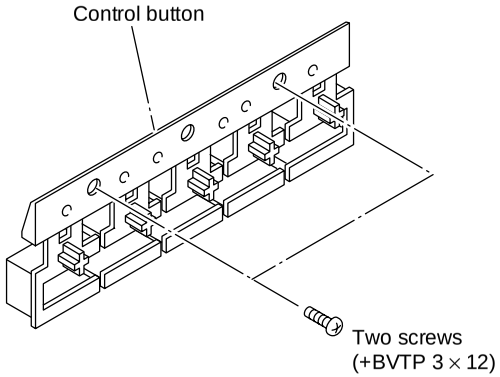

2-7-2. REPLACEMENT OF LIGHT GUIDE

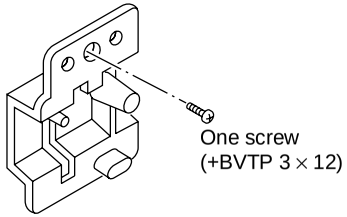

http://cxema.ru

2-8. D1 BOARD REMOVAL

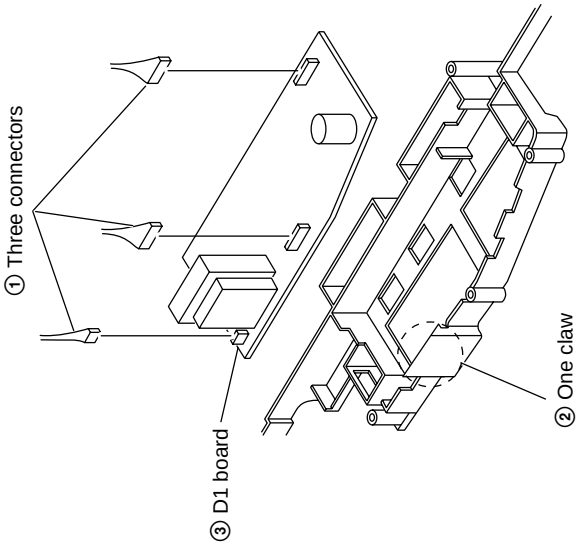

2-9. PWB HOLDER REMOVAL

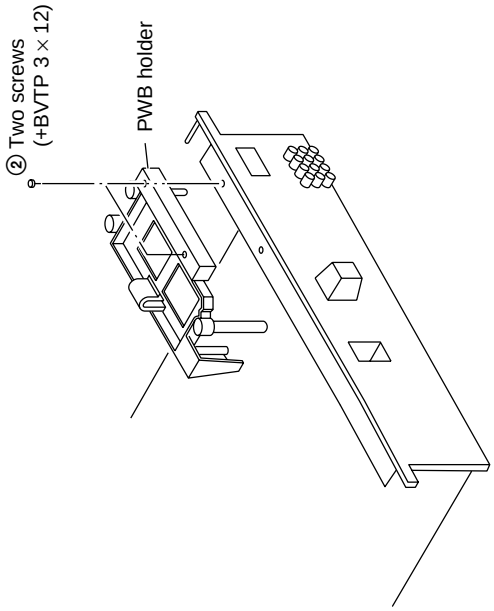

2-10. TERMINAL BRACKET REMOVAL

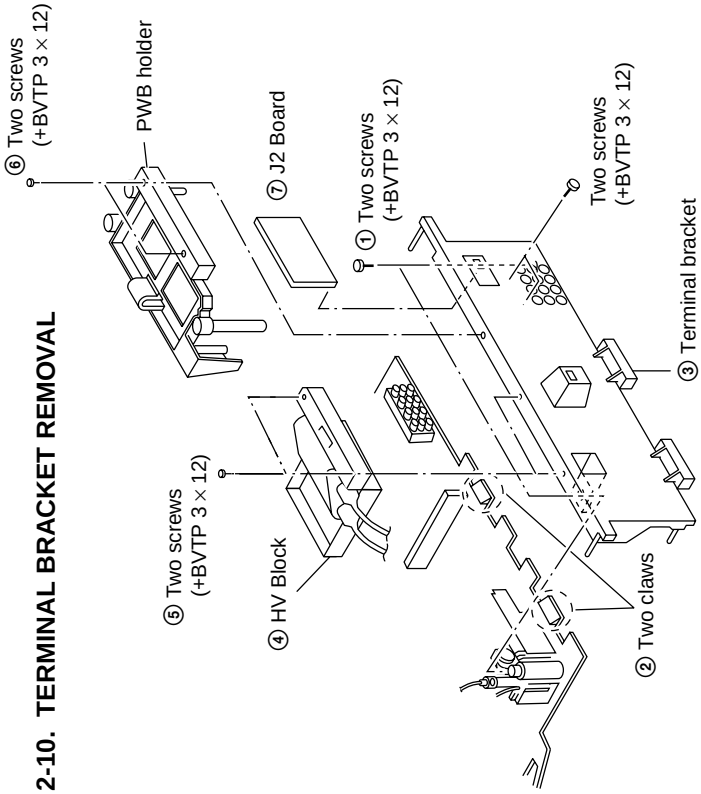

2-11. H3 BOARD REMOVAL

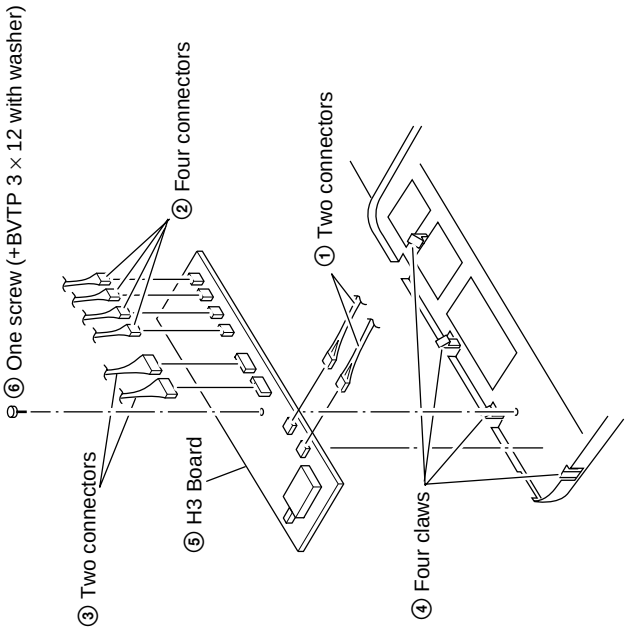

http://cxema.ru

2-14. PICTURE TUBE REMOVAL

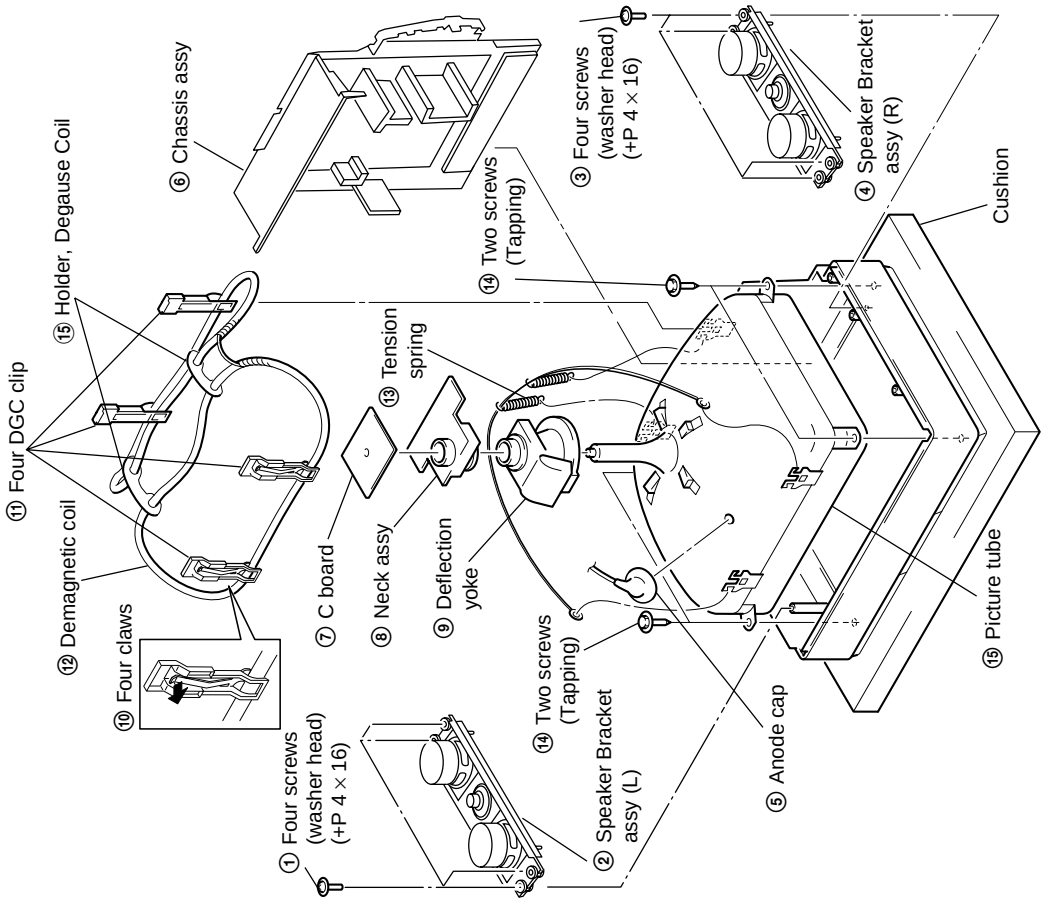

2-12. P1 BOARD REMOVAL

NOTE : V1 board is not used for this model

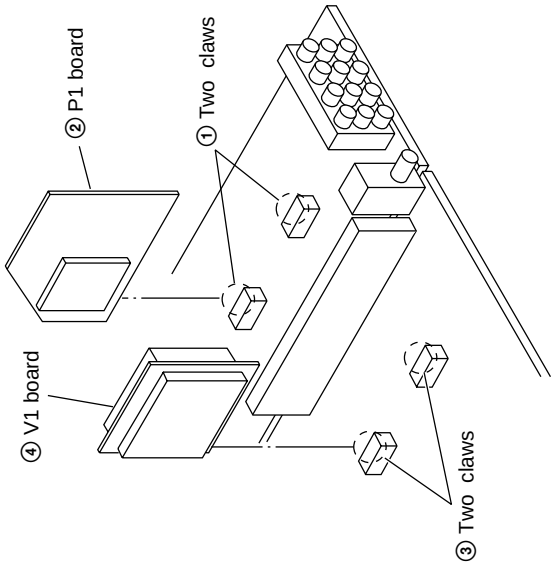

2-13. A AND B3 BOARDS REMOVAL

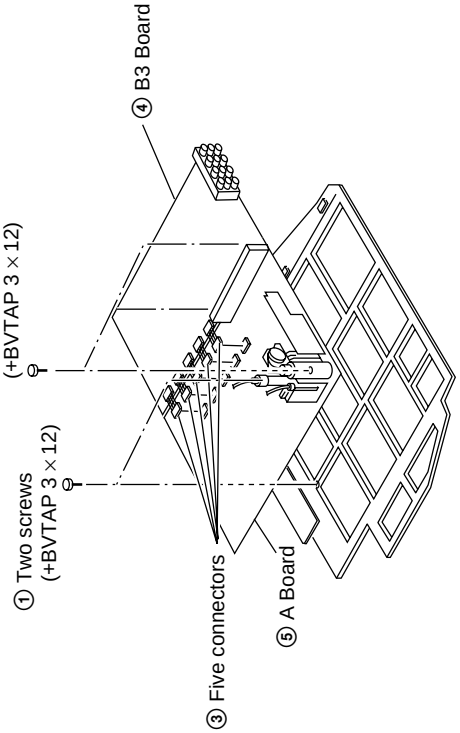

http://cxema.ru

• REMOVAL OF ANODE-CAP

NOTE : After removing the anode, short circuit the anode of the picture tube and the anode cap to the metal chassis, CRT shield or carbon paint on the CRT.

• REMOVING PROCEDURES

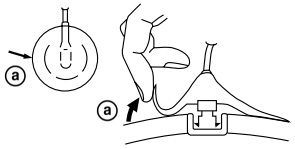

① **Turn up one side of the rubber cap in the direction indicated by the arrow ⓐ.**

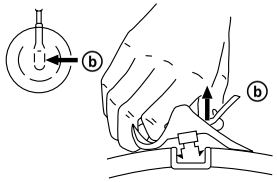

② **Using a thumb pull up the rubber cap firmly in the direction indicated by the arrow ⓑ.**

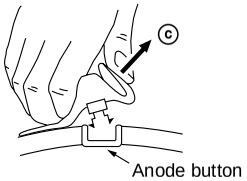

③ **When one side of the rubber cap is separated from the anode button, the anode-cap can be removed by turning up the rubber cap and pulling it up in the direction of the arrow ⓒ.**

• HOW TO HANDLE AN ANODE-CAP

① **Do not damage the surface of anode-caps with sharp shaped objects.**
② **Do not press the rubber too hard so as not to damage the inside of anode-cap. A metal fitting called the shatter-hook terminal is built into the rubber.**
③ **Do not turn the foot of rubber over too hard. The shatter-hook terminal will stick out or damage the rubber.**

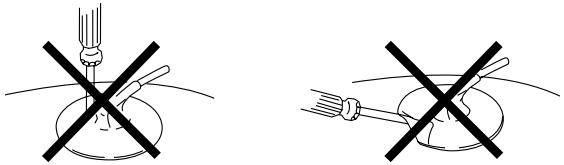

http://cxema.ru

SECTION 3
SET-UP ADJUSTMENTS

- The following adjustments should be made when a complete realignment is required or a new picture tube is installed.
- These adjustments should be performed with rated power supply voltage unless otherwise noted.

Controls and switches should be set as follows unless otherwise noted:
PICTURE control ..... normal
BRIGHTNESS control ..... normal

Perform the adjustments in the following order :
1. Beam Landing
2. Convergence
3. Focus
4. White Balance

Note : Test Equipment Required.
1. Color-bar/Pattern Generator
2. Degausser
3. Oscilloscope

Preparation :
- In order to reduce the influence of geomagnetism on the set's picture tube, face it east or west.
- Switch on the set's power and degauss with the degausser.

3-1. BEAM LANDING

1. Input a white signal with the pattern generator.
   Contrast } normal
   Brightness
2. Position neck assy as shown in Fig3-2.
3. Set the pattern generator raster signal to a green raster.
4. Move the deflection yoke to the rear and adjust with the purity control so that the green is at the center and the blue and the red take up equally sized areas on each side.
   (See Figures 3-1 through 3-4.)
5. Move the deflection yoke forward and adjust so that the entire screen is green. (See Figure 3-2.)
6. Switch the raster signal to blue, then to red and verify the condition.
7. When the position of the deflection yoke has been decided, fasten the deflection yoke with the screws and DY spacers.
8. If the beam does not land correctly in all the corners, use a magnet to adjust it.
   (See Figure 3-5.)

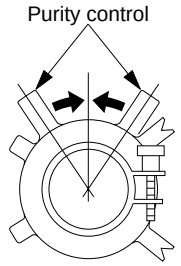

Fig. 3-3

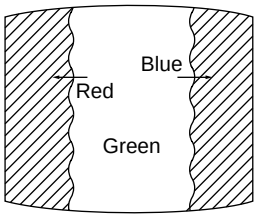

Fig. 3-4

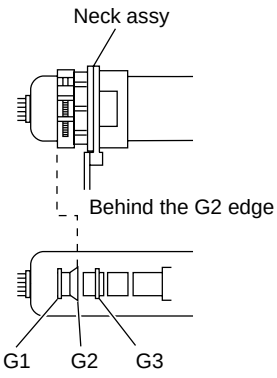

Fig. 3-1

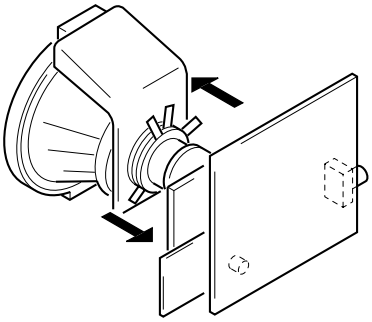

Fig. 3-2

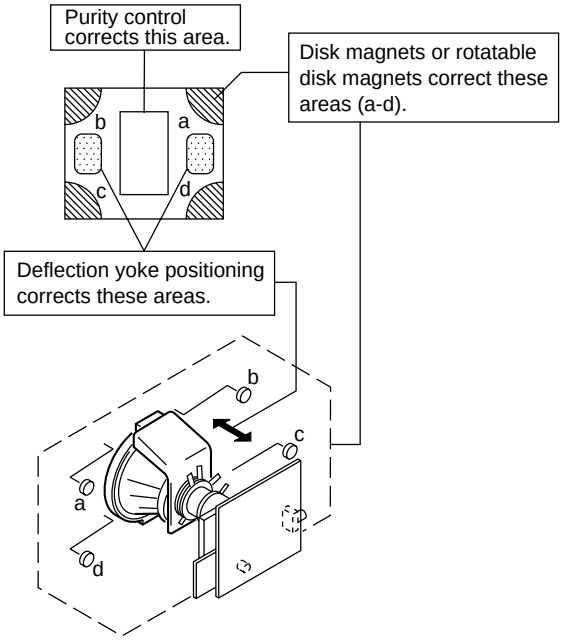

Fig. 3-5

http://cxema.ru

3-2. CONVERGENCE

Preparation :

- Before starting this adjustment, adjust the focus, horizontal size and vertical size.
- Minimize the brightness setting.
- Provide dot pattern.

(1) Horizontal and Vertical Static Convergence

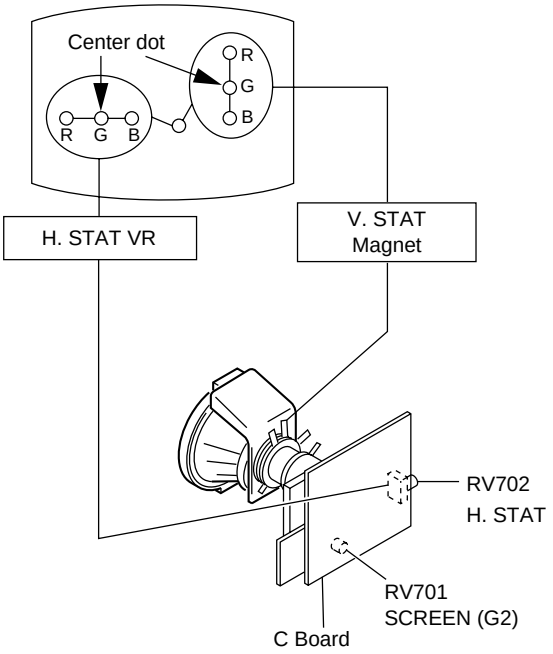

1. (Moving horizontally), adjust the H.STAT control so that the red, green and blue dots are on top of each other at the center of the screen.
2. (Moving vertically), adjust the V.STAT magnet so that the red, green and blue dots are on top of each other at the center of the screen.
3. If the H.STAT variable resistor cannot bring the red, green and blue dots together at the center of the screen, adjust the horizontal convergence with the H.STAT variable resistor and the V.STAT magnet in the manner given below.
   (In this case, the H.STAT variable resistor and the V.STAT magnet influence each other, so be sure to perform adjustments while tracking.)

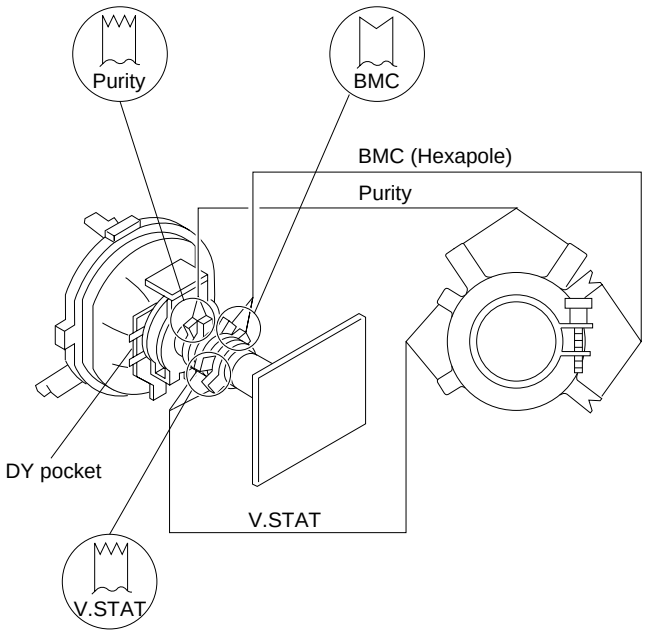

① V. STAT

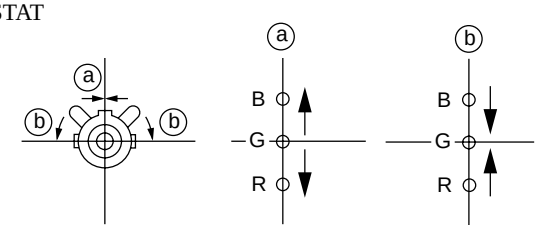

② H. STAT VR

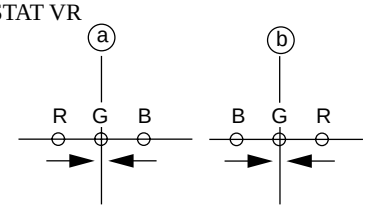

③

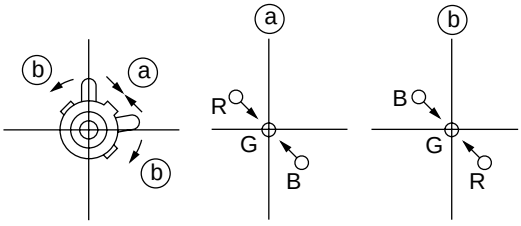

http://cxema.ru

④ BMC (Hexapole) Magnet.

If the red, green and blue dots are not balanced or aligned, then use the BMC magnet to adjust in the manner described below.

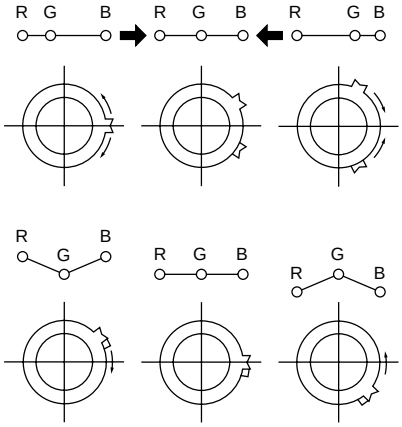

⑤ Y separation axis correction magnet adjustment.

1. Receive the cross-hatch signal and adjust [PICTURE] to [MIN] and [BRIGHTNESS] to [STANDARD] .

2. Adjust the Y separation axis correction magnet on the neck assembly so that the horizontal lines at the top and bottom of the screen are straight.

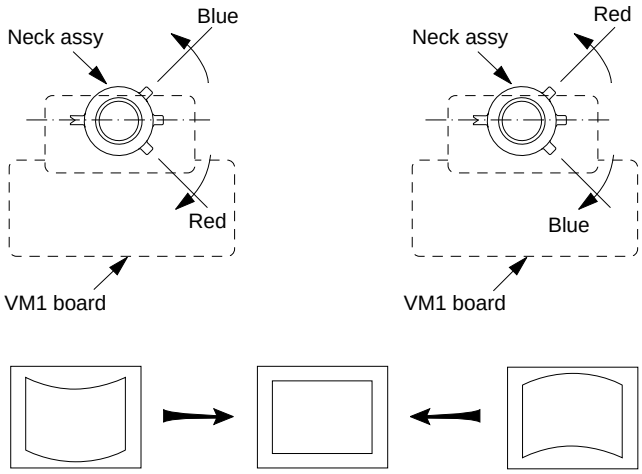

Note

1. The Red and Blue magnets should be equally far from the horizontal center line.
2. Do not separate the Red and Blue magnets too far. (Less than 8 mm)

(2) Dynamic Convergence Adjustment

Preparation:

- Before starting this adjustment, adjust the horizontal static convergence and the vertical static convergence

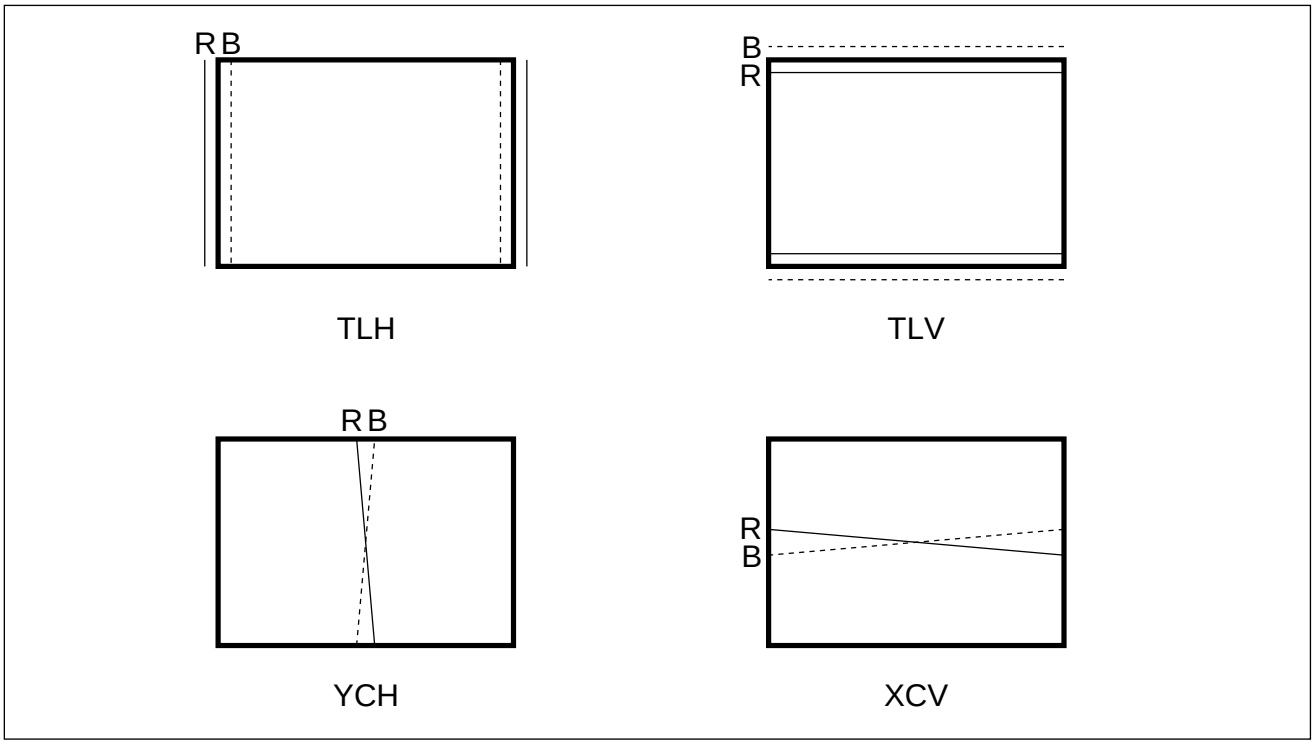

http://cxema.ru

TLV	Rotate	TLV-2	VOL (29”, 34”) on DY
	Rotate	TLV	VOL (25”) on DY
XCV	Rotate	XCV	Adj core on DY
YCH	Rotate	YCH	VOL on DY
TLH	Insert	TLH	Correction Plate to DY Pocket (Left or Right)

ON DY:

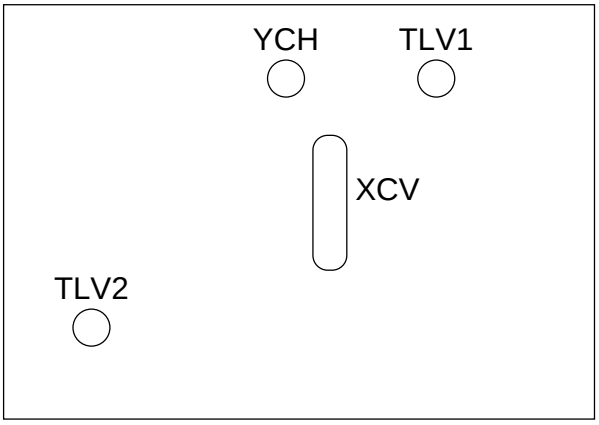

(3) Screen-corner Convergence

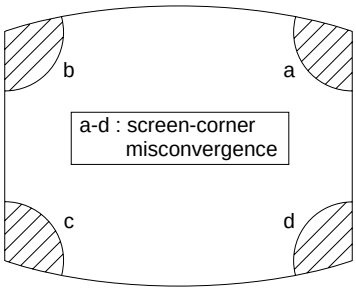

Fix a Permalloy assy corresponding to the misconverged areas.

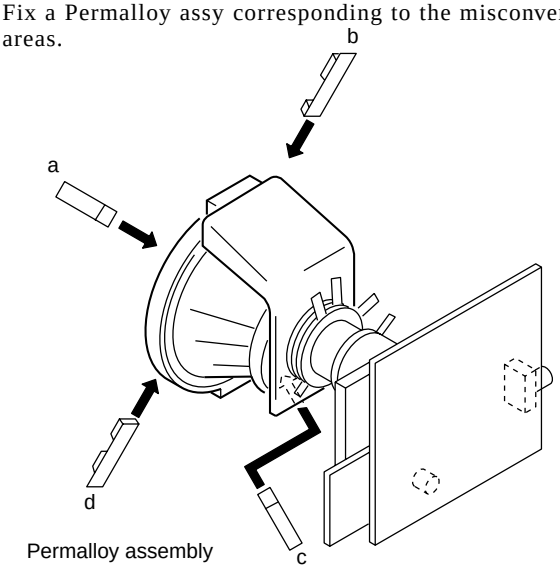

3-3. FOCUS ADJUSTMENT

Adjust FOCUS control on the flyback transformer for the best focus.

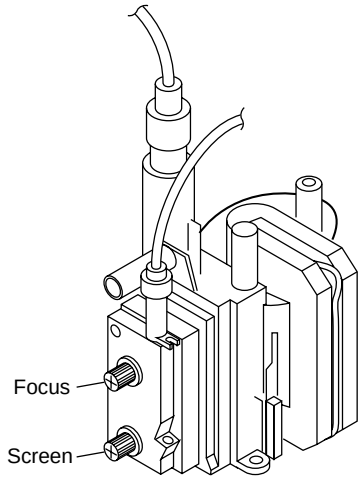

FLYBACK TRANSFORMER (T503)

http://cxema.ru

3-4. G2 (SCREEN) AND WHITE BALANCE ADJUSTMENTS

1. G2 (SCREEN) ADJUSTMENT

1) Set the PICTURE to normal.
2) Put to VIDEO input mode without signals.
3) Connect R, G and B of the C board cathode to the oscilloscope.
4) Adjust BRIGHTNESS to obtain the cathode voltage to the value below.
5) Adjust G2 (screen) on the FBT until picture shows the point before cut off.

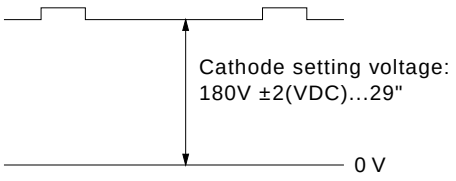

2. WHITE BALANCE ADJUSTMENT

1) Set to Service Mode (Refer Section 4-1: ADJUSTMENTS WITH COMMANDER).
2) Input white raster signal.
3) Set the PICTURE to minimum.
4) Select GCT (WHB 4) and BCT (WHB 5) with [1] and [4], and adjust the level with [3] and [6] for the best white balance.
5) Set the PICTURE to maximum.
6) Select GDR (WHB 1) and BDR (WHB 2) with [1] and [4], and adjust the level with [3] and [6] for the best white balance.
7) Write into the memory by pressing [MUTING] then [0].

3. SUB BRIGHT ADJUSTMENT

1) Set to service mode.
2) Input a staircase signal of black to white from the pattern generator.
3) BRIGHTNESS .... 50%.
   PICTURE ..... MINIMUM
4) Select SBR (WHB7) with [1] and [4], and adjust SBR (WHB7) level with [3] and [6] so that the second stripe from the right is dimly lit.

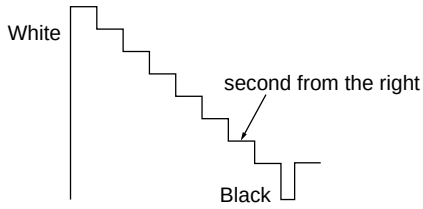

http://cxema.ru

SECTION 4
CIRCUIT ADJUSTMENTS

4-1. ADJUSTMENTS WITH COMMANDER

Service adjustments are made with the RM-953 that comes with this unit.

a. ENTERING SERVICE MODE

With the unit on standby
↓
DISPLAY
↓
5
↓
VOL (+)
↓
POWER

This operation sequence puts the unit into service mode.

b. METHOD OF CANCELLATION FROM SERVICE MODE

Set the standby condition (Press POWER button on the commander), then press POWER button again, hereupon it becomes TV mode.

c. METHOD OF WRITE INTO MEMORY

1) Set to Service Mode.
2) Press 1 (UP) and 4 (DOWN), select an item of adjustment.
3) Press MUTING button and it will indicate WRITE on the screen.
4) Press 0 button to write into memory.

d. MEMORY WRITE CONFIRMATION METHOD

1) After adjustment, pull out the plug from AC outlet, and then plug into AC outlet again.
2) Turn the power switch ON and set to Service Mode.
3) Call the adjusted items again to confirm adjustments were made.

The screen display is :

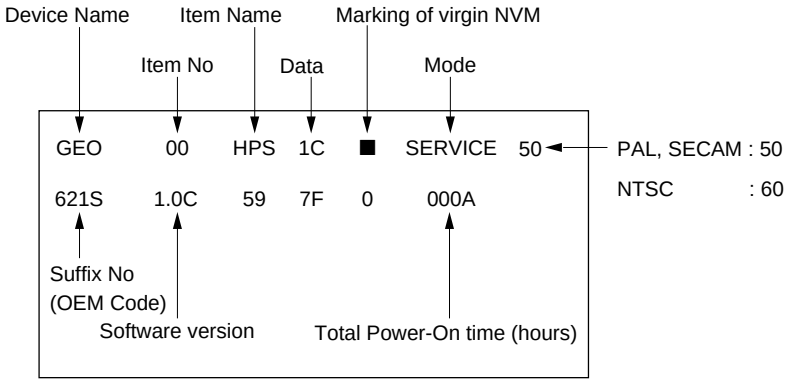

1, 4 ↓	Select the adjustment item.
3, 6 ↓	Raise/lower the data value.
MUTING ↓	Writes.
0	Executes the writing.

7, 0	All the data becomes the values in memory.
8, 0	All user control goes to the standard state.
5, 0	Service data initialization (Be sure not to use usually.)
2, 0	Write 50Hz adjustment data to 60Hz, or vice versa.

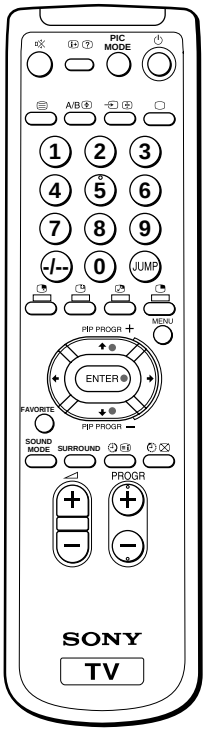

RM-953

http://cxema.ru

4-2. ADJUSTMENT METHOD

Item Number 00 of device GEO

This explanation uses H-Position as an example.

1. Select “GEO 00 HPS” with the 1 and 4 buttons.
2. Raise/lower the data with the 3 and 6 buttons.
3. Select the optimum state. (The standard is 1F for PAL reception.)
4. Write with the MUTING button. (The display changes to WRITE.)
5. Execute the writing with the 0 button. (The WRITE display will be changed to red color while excuting, and back to SERVICE.)

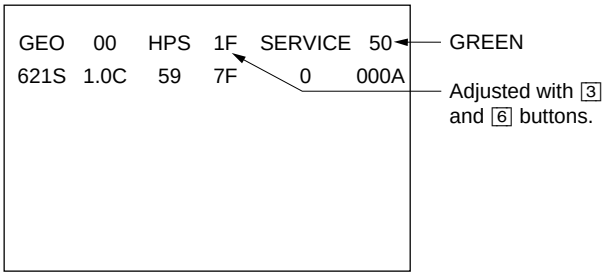

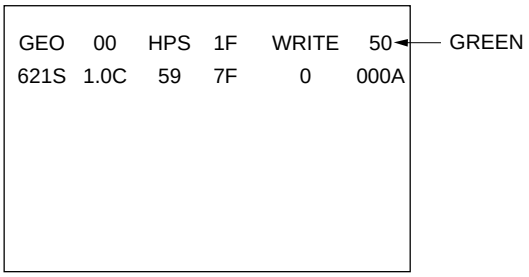

Written with MUTING

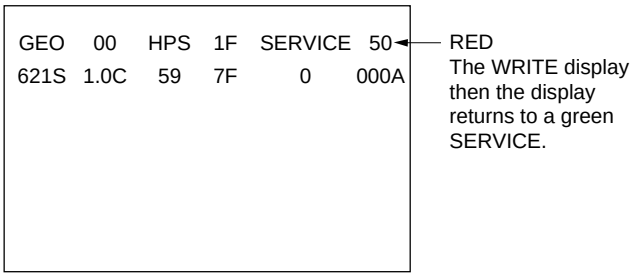

Write executed with 0

Use the same method for all Items. Use 1 and 4 to select the adjustment item, use 3 and 6 to adjust, write with MUTING, then execute the write with 0.

Note : 1. In WRITE, the data for all items are written into memory together.
2. For adjustment items that have different standard data between 50Hz or 60Hz, be sure to use the respective input signal after adjustment.

http://cxema.ru

Adjustment Item Table

Device Name	Functionality No	Functionality Name	Note	Data Range	Function	Note for Different Data	Register No. (bit)	Slava Address	RAM Address (bit)
GEO	0	HPS	7	3F	H Position	50/60HZ	12 (7-2)	CXA2139S(88H)	96 (7-2)
	1	HSZ	1F	3F	H Size	50/60HZ	11 (7-2)		95 (7-2)
	2	PAP	1F	3F	Pin Amp	50/60HZ	13 (7-2)		97 (7-2)
	3	TLT	7	0F	Trapezium	50/60HZ	15 (7-4)		99 (7-4)
	4	VPS	1F	3F	V Position	50/60HZ	0F (7-2)		93 (7-2)
	5	VSZ	1F	3F	V Size	50/60HZ	0E (7-2)		92 (7-2)
	6	SCO	7	0F	S Correction	50/60HZ	10 (7-4)		94 (7-4)
	7	VLN	7	0F	V Linearity	50/60HZ	10 (3-0)		94 (3-0)
	8	BOW	7	0F	AFC Bow	50/60HZ	16 (7-4)		9A (7-4)
	9	AGL	7	0F	AFC-Angle	50/60HZ	16 (3-0)		9A (3-0)
	0A	UPN	1F	3F	Upper Pin	50/60HZ	14 (7-2)		98 (7-2)
	0B	LPN	2F	3F	Lower Pin	50/60HZ	18 (7-2)		9C (7-2)
	0C	HBL	1	1	H Blanking on/off		18 (1)		6C (1)
	0D	LBL	7	0F	Left H Blanking	50/60HZ	17 (7-4)		9B (7-4)
	0E	RBL	7	0F	Right H Blanking	50/60HZ	17 (3-0)		9B (3-0)
WHB	0	RDR	1F	3F	R Drive	DYNAMIC/other	09 (7-2)	CXA2139S(88H)	A3 (7-2)
	1	GDR	1F	3F	G Drive	DYNAMIC/other	0A (7-2)		A4 (7-2)
	2	BDR	1F	3F	B Drive	DYNAMIC/other	0B (7-2)		A5 (7-2)
	3	RCT	7	0F	R Cutoff	SECAM/other	07 (3-0)		A7 (3-0)
	4	GCT	7	0F	G Cutoff	SECAM/other	08 (7-4)		A8 (3-0)
	5	BCT	7	0F	B Cutoff	SECAM/other	08 (3-0)		A8 (3-0)
	6	BMN	15	1F	Brightness Minimum Data		06 (7-2)		106
	7	SBR	1F	3F	Sub Brightness Control		06 (7-2)		107
SAJ	0	PMX	33	3F	Picture Maximum Data		03 (7-2)	CXA2139S(88H)	105
	1	SHU	8	0F	Sub Hue Control	TV/Video	05 (7-2)		108
	2	SSH	8	0F	Sub Sharpness Control	TV/Video	07 (7-4)		109
	3	SCL	1F	3F	Sub Color Control	NTSC/others	04 (7-2)		10A
VP	0	EHT	4	0F	EHT Comp	50/60HZ	15 (3-0)	CXA2139S(88H)	99 (3-0)
	1	GMA	2	03	Gamma Correction	NTSC/others	0B (1-0)		25B (1-0)
	2	YDL	6	0F	Y Delay	PAL/SECAM/NTSC	0C (3-0)		A0 (3-0)
	3	SST	1	03	SECAM ID Start Position		1B (1-0)		6F (1-0)
	4	SSP	1	03	SECAM ID Stop Position		1B (3-2)		6F (3-2)
	5	SLV	2	03	SECAM ID Level		1C (1-0)		70 (1-0)
	6	SBF	22	3F	SECAM BELL fO		1C (7-2)		70 (7-2)
	7	DYC	1	1	Dynamic Color on/off		0A (1)		5E (1)
	8	ABL	1	1	ABL Mode Switching (except STANDARD mode)		09 (1)		5D (1)
	9	VTH	1	1	ABL Detection Vth Switching		09 (0)		5D (0)
	0A	SFO	1	1	FO Switching for Sharpness	NTSC/others	05 (1)		24A (1)
	0B	DCX	1	1	DC Trans. Ratio Switching		06 (1)		5A (1)
	0C	SHT	1	1	Pre-/Overshoot ratio Switch	NTSC/others	06 (0)		24A (0)

http://cxema.ru

Adjustment Item Table

Device Name	Functionality No	Functionality Name	Note	Data Range	Function	Note for Different Data	Register No. (bit)	Slava Address	RAM Address (bit)
VP	0D	HDW	0	1	H Drive Pulse Width Switch		00 (6)		54 (6)
	0E	AFC	1	03	AFC Gain Control	TV/Video	0F (1-0)		A1 (1-0)
	0F	HOS	7	0F	H Oscillation		0C (7-4)		60 (7-4)
	10	HSS	0	1	Slice Level of H Sync Sep.		0D (1)		61 (1)
	11	VSS	0	1	Slice Level of V Sync Sep.		0D (0)		61 (0)
	12	HMS	1	1	Macro Vision C/m off/on	50/60Hz	0E (0)		92 (0)
	13	YUV	1	1	YUV Switch Control		01 (0)		55 (0)
	14	CDV	1	3	CD mode for Video	Video only	0D (5-4)		259 (5-4)
	15	RON	1	1	R ON	not memorized	01 (3)		55 (3)
	16	GON	1	1	G ON	not memorized	01 (2)		55 (2)
	17	BON	1	1	B ON	not memorized	01 (1)		55 (1)
	18	PON	1	1	P ON	not memorized	00 (7)		54 (7)
	19	BLK	0	1	BLK Off		12 (0)		66 (0)
	1A	VMC	0	1	VM Off		13 (0)		67 (0)
AP	0	BCS	1	3	Bass Center Shift		#4 (3-0)	TDA7315(80H)	24C (1-0)
	1	TCS	1	3	Treble Center Shift		#5 (3-0)		24D (1-0)
	2	TRF	2	3	RF Treble Offset		#5 (3-0)		24E (1-0)
MSP	0	WST	15	FF	W/G Stereo Threshold			MSP3415D(84H)	165
	1	WBT	EC	FF	W/G Bilingual Threshold				166
	2	WLL	5	FF	W/G Monaural Threshold				167
	3	WAC	1	0F	W/G Agreement Count				168
	4	WDL	30	FF	W/G Search Delay				169
	5	NDL	20	FF	NICAM Search Delay				16A
	6	SDL	10	FF	Stereo status Read Delay				16B
	7	AGC	1	1	AGC Switch Auto/Constant		00BB (7)		116 (7)
	8	REL	28	3F	AGC Gain at Constant Mode		00BB (6-1)		116 (6-1)
	9	CRM	0	1	Carrier muting on/off		00BB (9)		115 (9)
	0A	ACO	1	1	Audio Clock out on/off		0083 (5)		11A (5)
	0B	FP	1B	7F	FM Prescale for non-M system		000E (14-8)		221
	0C	FPM	32	7F	FM Prescale for M system		000E (14-8)		222
	0D	FH	36	7F	FM Prescale for HDEV		000E (14-8)		223
	0E	FHM	65	7F	FM Prescale for HDEV and M		000E (14-8)		224
	0F	WGP	2A	7F	W/G Prescale		000E (14-8)		225
	10	NIP	6D	7F	NICAM Prescale		0010 (14-8)		14F
	11	ERR	50	FF	Auto FM switch Threshold		0021 (10-3)		174
	12	VOL	6D	FF	Loud Speaker gain 07xx0	TEMPORARY	0000 (11-4)		254

http://cxema.ru

Adjustment Item Table

Device Name	Functionality No	Functionality Name	Note	Data Range	Function	Note for Different Data	Register No. (bit)	Slava Address	RAM Address (bit)
SVP	0	SBF	22	3F	SECAM BELL f0		1C (7-2)	CXA2060AS(8AH)	85 (7-2)
	1	HOS	7	0F	H Oscillation		0C (7-4)		80 (7-4)
	2	SHU	8	0F	Sub Hue Control		05 (7-2)		210
	3	SCL	1F	3F	Sub Color Control		04 (7-2)		211
PIP	0	SDL	02	0F	Delay of output SELECT		01 (6-3)	SDA9288X(D6H)	1A0 (6-3)
	1	PPH	15	FF	H Position of TOP-LEFT Pin P		01/02		1AF
	2	PPV	2E	FF	V Position of TOP-LEFT Pin P		03 (7-0)		1B0
	3	YDL	0	07	Delay of Luminance Input		04 (2-0)		1A3 (2-0)
	4	HDI	00	0F	H Sync Delay for Inset		06 (3-0)		1A5 (3-0)
	5	ISC	01	1	Inset Clock Selection		06 (4)		1A5 (4)
	6	CLP	1	1	Clamp Pulse Selection		06 (5)		1A5 (5)
	7	CLC	0	1	Clamp Cycle Selection		06 (6)		1A5 (6)
	8	CON	00	0F	Contrast Adjustment for inset		09 (7-4)		1A8 (7-4)
	9	PLL	2	03	H Position For A-ch		0D (6-5)		1AC (6-5)
	0A	PDV	0	0F	PIP V Pedestal Level		0E (7-4)		1AD (7-4)
	0B	PDU	0	0F	PIP U Pedestal Level		0E (3-0)		1AD (3-0)
TXT	0	TXH	1	3	Teletext Horizontal Position		10 (1-0)	SAA5261(58H)	248 (1-0)
	1	TXV	0	3	Teletext Vertical Position		10 (6-4)		248 (5-4)
OPM	0	OSH	0A	3F	OSD H Position	Option-Misc	1F1	CXP86461(60H)	18D (7-2)
	1	COM	1	03	Comb Selection				23F (7-6)
	2	APC	1	1	APC Switch				23E (5)
	3	TSY	0	03	TV Sys at Auto TV Sys				23E (4-3)
	4	MUT	0	1	No Signal Mute				23E (0)
	5	AFM	1	1	Auto FM switch				23E (1)
	6	RFB	0	3	C-BPF Control				23F (5-4)
	7	TVO	0	7	Tilt to V-Angle offset				23F (2-0)
OPB	0	OP1	FF	FF	Optional Bits 1 (see below)	Option-Bits		CXP86461(60H)	48
	1	OP2	63	FF	Optional Bits 2 (see below)				49
	2	OP3	31	FF	Optional Bits 3 (see below)				4A

NOTE

- shaded items are fixed data.
- Standard data listed on the Adjustment Item Table are reference values, therefore it may be different for each model and for each mode.
- Note for Different Data — Those are the standard data values written on the microprocessor. Therefore, the data values of the modes and stored respectively in the memory.
  In case of a device replacement, adjustment by rewriting the data value is necessary for some items.

http://cxema.ru

ITEM INFORMATION.

No. OPB0 OP1

Item	XTAL 4.43	XTAL 3.58	SECAM	2nd. Lang	B/G	I	D/K	M
KV-XF29M97	1	1	1	1	1	1	1	1
KV-XF29M67	1	1	1	1	1	1	1	1

No. OPB1 OP2

Item	TOP	NICAM	HDEV	Thai Bil	–	DVD Input	AV Input	
KV-XF29M97	0	1	1	0	0	0	1	1
KV-XF29M67	0	1	1	0	0	0	1	1

No. OPB2 OP3

Item	–	–	Auto PIC	Auto TV sys	US ST	AV Mono	11 KEY	Color SW
KV-XF29M97	0	0	1	1	0	0	0	1
KV-XF29M67	0	0	1	1	0	0	0	1

http://cxema.ru

4-3. PICTURE QUALITY ADJUSTMENTS

SUB COLOR ADJUSTMENT

1. Input a PAL color-bar.
2. Set to the following condition:
   PICTURE 100%, BRIGHTNESS 50%, COLOR 50%
3. Connect an oscilloscope to pin ① (B OUT) of CN305, A board.
4. Set to Service Mode and select SAJ 3 'SCL' with [1] and [4] of the commander then adjust to VB2=VB3=VB4 with [3] and [6].
5. Press [MUTING] → [0] of the commander to write the data.
6. Adjust SAJ 3 'SCL' as step 2 to 5 when receiving NTSC color-bar.

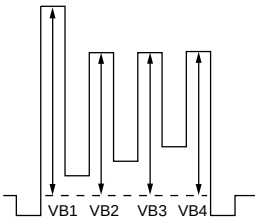

VB2 = VB3 = VB4

SUB HUE ADJUSTMENT

1. Select Video 1.
2. Input a NTSC color-bar, video into Video 1.
3. Set the following condition:
   PICTURE 100%, BRIGHTNESS 50%, COLOR 50%
4. Connect an oscilloscope to pin ① (B OUT) of CN305, A board.
5. Select SAJ 1 'SHU' with [1] and [4] of the commander by setting to Service Mode and adjust to VB1=VB2=VB3=VB4 with [3] and [6].

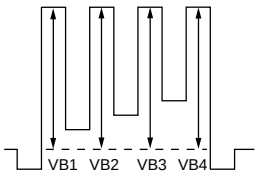

VB1 = VB2 = VB3 = VB4

6. Press [MUTING] → [0] of the commander to write the data.

BELL FILTER ADJUSTMENT

1. Input SECAM color-bar signal.
2. Connect the dual-trace oscilloscope to CN303 pin ⑨ (not mounted).
3. Adjust SERVICE MODE, ITEMS 'SBF' as shown below.

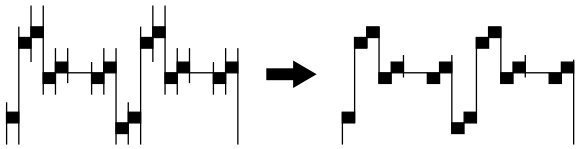

4-4. DISPLAY POSITION ADJUSTMENT

PIP POSITION

1. Input a PAL color-bar.
2. Press PIP button of the remote commander to set the PIP picture.
3. Set to Service Mode.
4. Use [1] and [4] of the remote commander to select PIP 1 "PIP" and use [3] and [6] to set data "14".
5. Select PIP 2 "PPV" to set data "27".
6. Press [MUTING] → [0] of the remote commander to write the data.
7. Use the screen display menu changing the PIP position to check the PIP position.

4-5. A BOARD ADJUSTMENT AFTER IC003 (MEMORY) REPLACEMENT

When replacing IC003 (MEMORY), be sure to change IC001 (µ-COM) to the following new IC at the same time.
IC001(µ-CON):
CXP86461-621S

1. Enter to Service Mode.

2. Press commander buttons [5] and [0] (Data Initialize), and [2] and [0] (Data Copy) to initialize the data.

3. Call each item number and check if the respective screen shows the normal picture.
   In cases where items are not well adjusted, rectify the items with fine adjustment.
   Write the data per each item number ([MUTING] +[0]).

4. Select item numbers "OPB0" (OP1), "OPB1" (OP2) and "OPB2" (OP3) and respectively set the bit per model with command buttons [3] and [6].

5. Press commander buttons [8] and [0] (Test Normal) to return to the data that was set on the shipment from the factory.
   (This will also cancel Service Mode.)

http://cxema.ru

4-6. PICTURE DISTORTION ADJUSTMENT (1)

Item Number 00 – 0B

GEO 0 HPS (H POSITION)

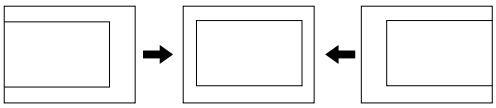

GEO 1 HSZ (H SIZE)

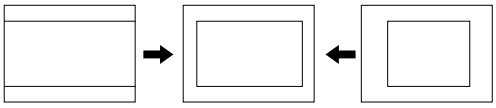

GEO 2 PAP (PIN AMP)

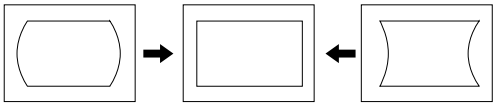

GEO 3 TLT (TRAPEZIUM)

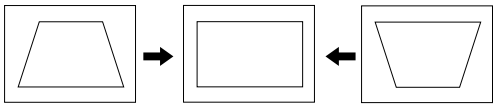

GEO 4 VPS (V POSITION)

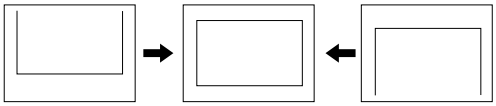

GEO 5 VSZ (V SIZE)

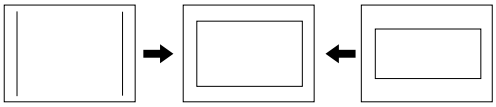

GEO 6 SCO (VERTICAL S-Correction)

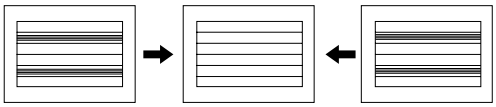

GEO 7 VLN (V LINEARITY)

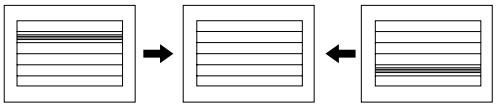

GEO 8 BOW (AFC.BOW)

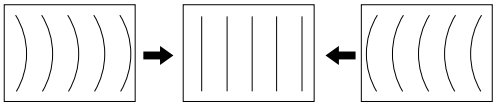

GEO 9 AGL (AFC.ANGLE)

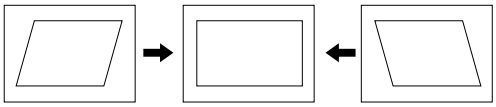

GEO 0A UCP (UPPER CORNER PIN)
GEO 0B LCP (LOWER CORNER PIN)

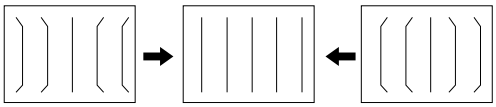

PICTURE DISTORTION ADJUSTMENT (2)

H-TRAPEZOID (Rotate RV1801)

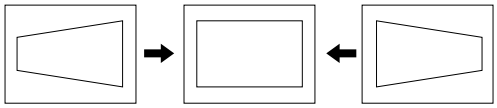

http://cxema.ru

MEMO

http://cxema.ru

MEMO

http://cxema.ru

http://cxema.ru

SECTION 5
DIAGRAMS

5-1. BLOCK DIAGRAM

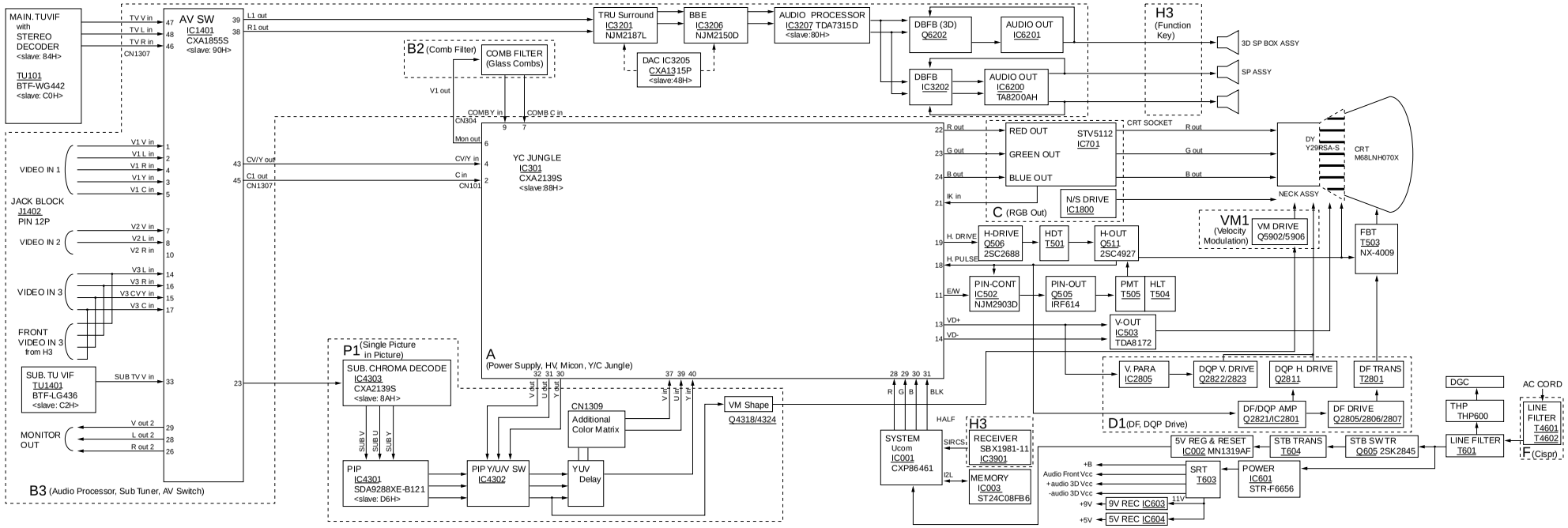

http://cxema.ru

5-2. FRAME SCHEMATIC DIAGRAM

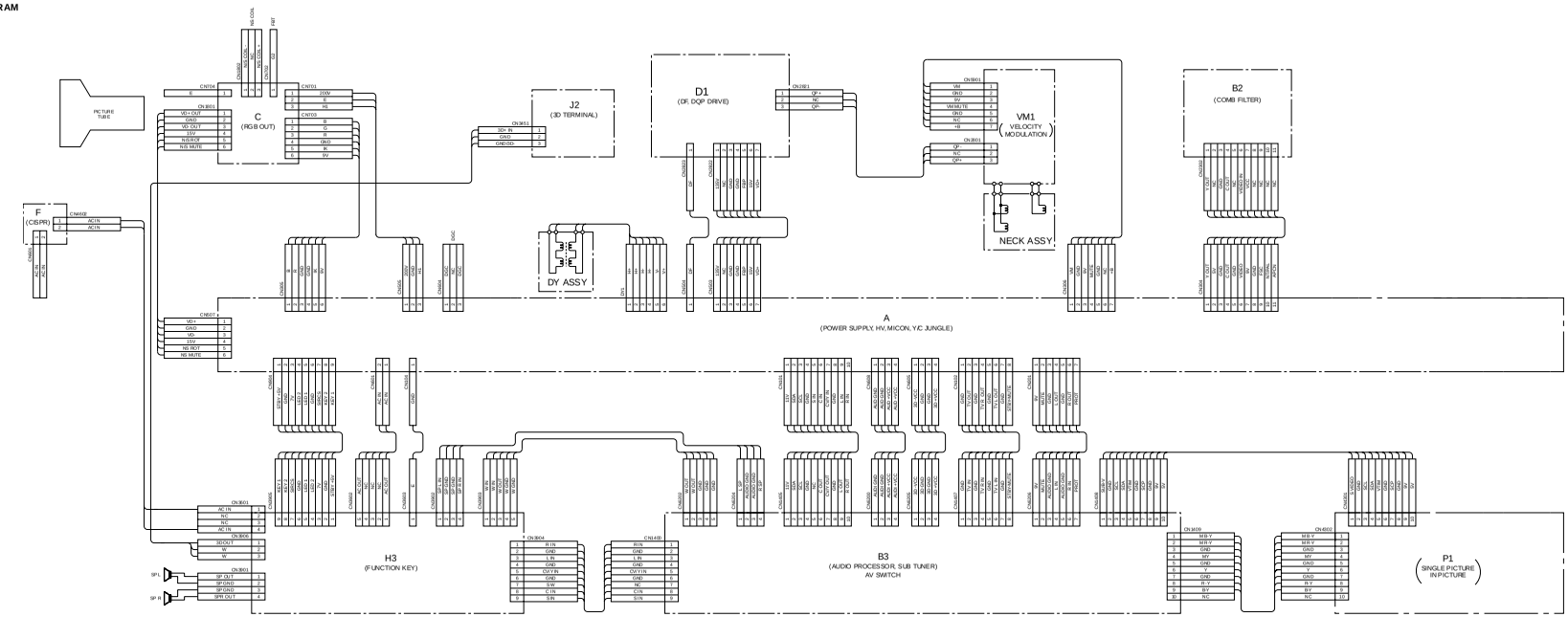

http://cxema.ru

5-3. CIRCUIT BOARDS LOCATION

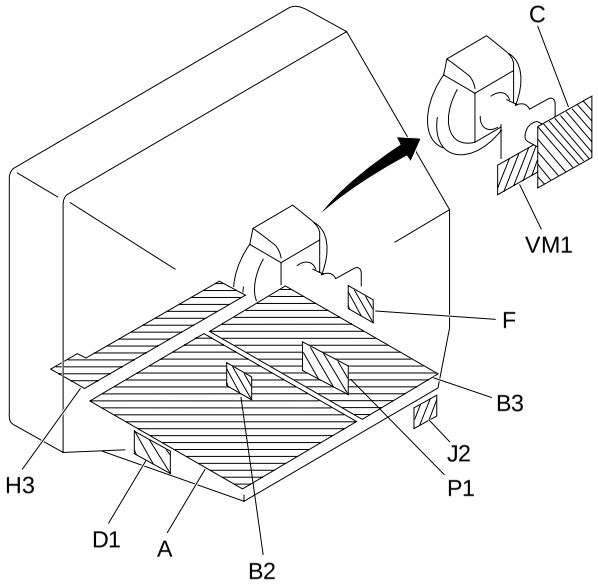

KV-XF29M97/XF29M67
RM-953

5-4. SCHEMATIC DIAGRAMS AND PRINTED WIRING BOARDS

Note:

- All capacitors are in µF unless otherwise noted.
- All electrolytic capacitors are rated at 50V unless otherwise noted.
- All resistors are in ohms.
  kΩ = 1000Ω, MΩ = 1000kΩ
- Indication of resistance which does not have rating electrical power is as follows.
  Pitch: 5 mm
  Rating electrical power 1/4W (CHIP: 1/10W)
- : nonflammable resistor.
- : internal component.
- : panel designation or adjustment for repair.
- All variable and adjustable resistors have characteristic curve B unless otherwise noted.
- **Readings are taken with a color-bar signal input.**
  no mark : PAL
  ( ) : SECAM
  [ ] : NTSC 3.58
  « » : NTSC 4.43
- **Readings are taken with a 10Ω MW digital multimeter.**
- **Voltage are dc with respect to ground unless otherwise noted.**
- **Voltage variations may be noted due to normal production tolerances.**
- **All voltages are in V.**
- ＊ **: Cannot be measured.**
- **Circled numbers are waveform references.**
- **: B + bus.**
- **: B – bus.**
- **: signal path.**

Ref erence inf ormation

RESISTOR	: RN	METAL FILM
	: RC	SOLID
	: FPRD	NONFLAMMABLE CARBON
	: FUSE	NONFLAMMABLE FUSIBLE
	: RS	NONFLAMMABLE METAL OXIDE
	: RB	NONFLAMMABLE CEMENT
	: RW	NONFLAMMABLE WIREWOUND
	: ※	ADJUSTMENT RESISTOR
COIL	: LF-8L	MICRO INDUCTOR
CAPACITOR	: TA	TANTALUM
	: PS	STYROL
	: PP	POLYPROPYLENE
	: PT	MYLAR
	: MPS	METALIZED POLYESTER
	: MPP	METALIZED POLYPROPYLENE
	: ALB	BIPOLAR
	: ALT	HIGH TEMPERATURE
	: ALR	HIGH RIPPLE

Note: The component identified by shading and mark ⚠ are critical for safety. Replace only with part number specified.

http://cxema.ru

KV-XF29M97/XF29M67 RM-953

A Board IC001 CXP86461-621S

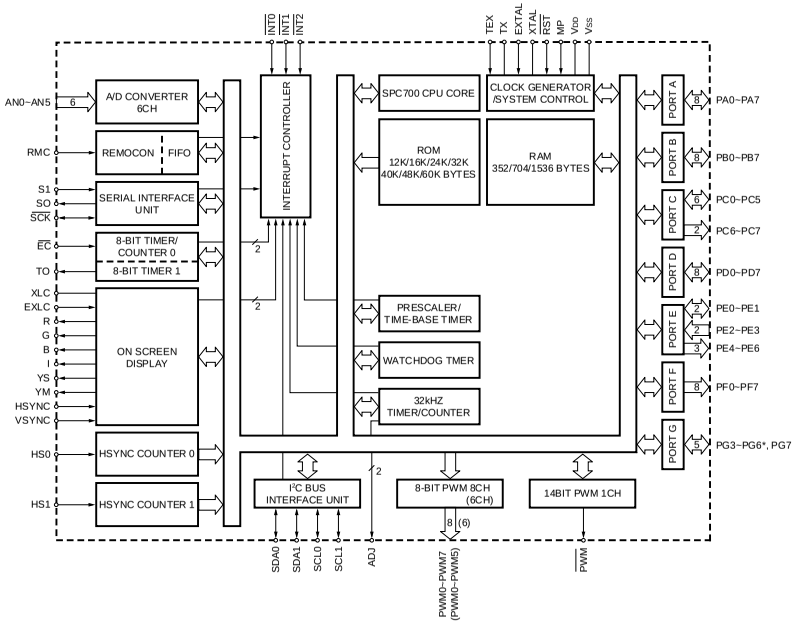

A BOARD WAVEFORMS

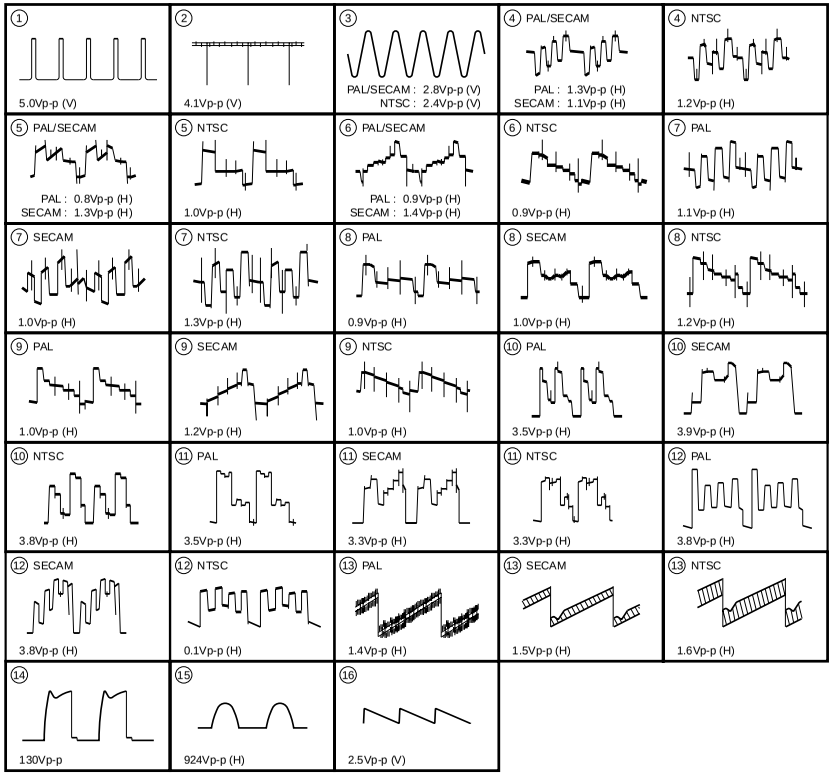

http://cxema.ru

(1) Schematic Diagram of A(1/2) Board

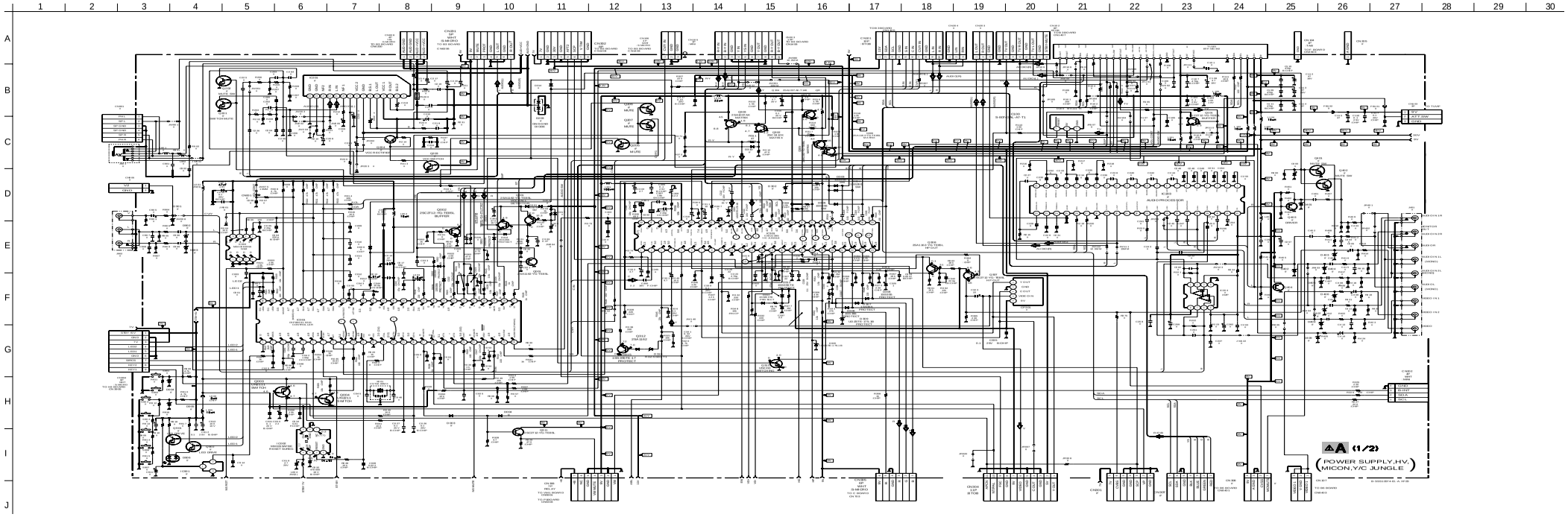

http://cxema.ru

(2) Schematic Diagram of A(2/2) Board

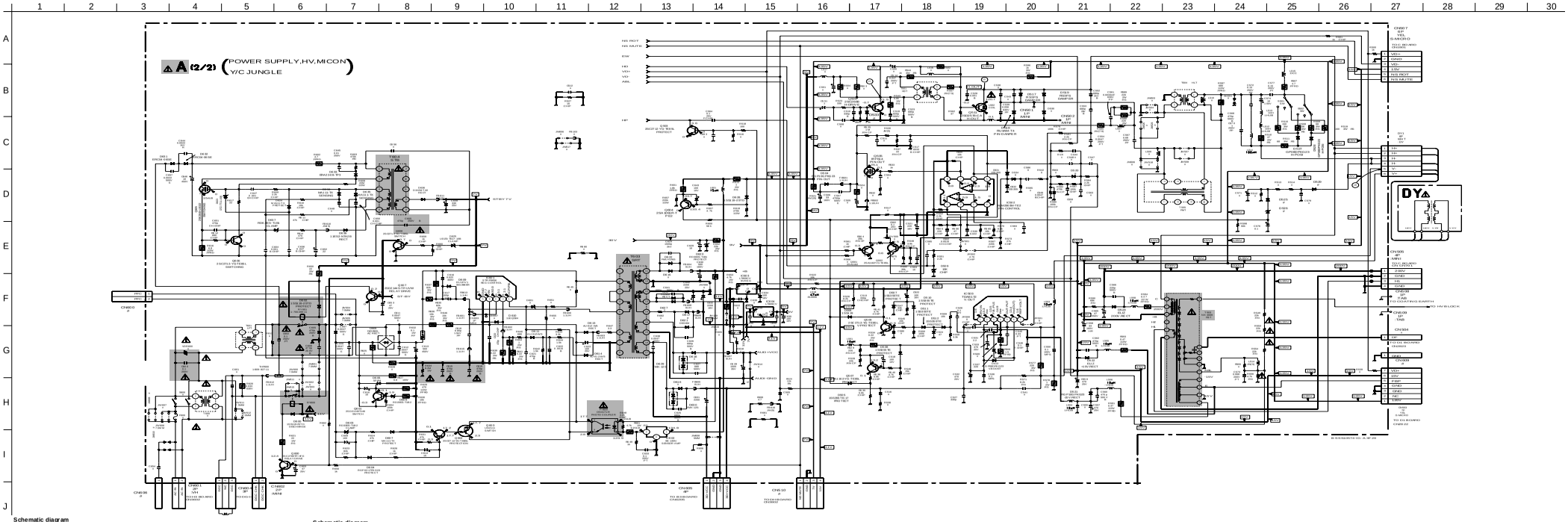

Schematic diagram ← A (2/2) board

Schematic diagram A (2/2) board →

http://cxema.ru

(3) Schematic Diagrams of F and J2 Boards

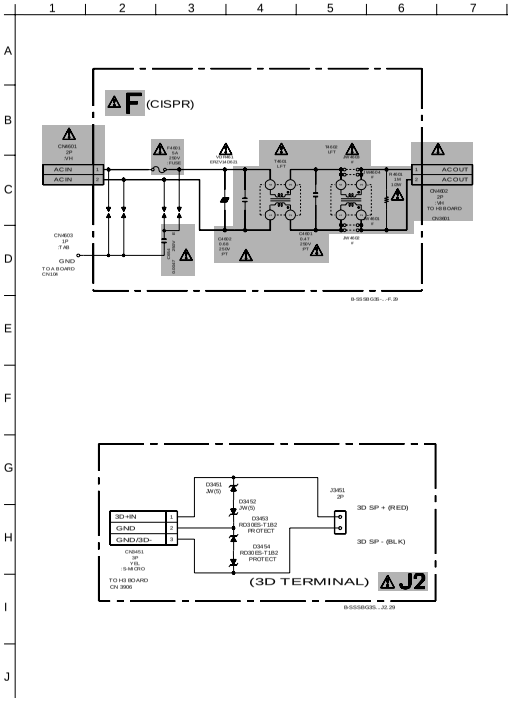

PRINTED WIRING BOARDS

F [CISPR] **J2** [3D TERMINAL]

– F Board –

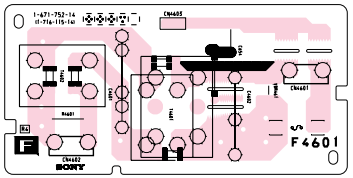

– J2 Board –

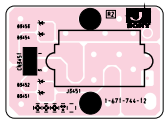

NOTE:
The circuit indicated at left contains high voltage of over 600 Vp-p. Please pay attention when inspecting or repairing it to prevent an electric shock.

A BOARD

IC	
IC001	B-10
IC002	C-10
IC003	A-9
IC100	B-5
IC201	B-11
IC203	B-3
IC204	B-2
IC301	B-6
IC503	J-5
IC601	J-8
IC602	H-6
IC603	D-8
IC604	D-10
IC901	I-13

TRANSISTOR	
Q001	C-8
Q002	B-8
Q003	C-9
Q004	B-9
Q101	A-4
Q201	A-11
Q202	A-11
Q203	C-11
Q204	C-12
Q205	A-12
Q206	A-11
Q207	A-12
Q301	A-8
Q302	B-6
Q303	A-6
Q304	A-6
Q305	B-6
Q306	B-5
Q307	C-7
Q308	C-7
Q309	C-7
Q310	D-8
Q311	D-9
Q312	B-7
Q313	B-8
Q315	B-5
Q401	D-2
Q402	D-1
Q403	D-2
Q404	C-3
Q501	D-6
Q502	E-7
Q503	F-6
Q505	D-6
Q506	E-2
Q507	H-6
Q509	F-6
Q511	F-1
Q600	D-12
Q601	F-11
Q602	J-7
Q604	H-6
Q605	E-12
Q606	F-11
Q607	H-13
Q608	E-12
Q901	H-13

DIODE	
D001	B-8
D002	C-8
D003	C-9
D004	D-8
D005	B-8
D006	A-3
D100	B-5
D203	C-11
D200	A-9
D301	B-9
D302	B-6
D303	B-5
D304	B-5
D305	B-5
D306	C-5
D307	C-5
D308	C-5
D309	B-6
D310	A-6
D311	C-6
D312	C-6
D313	A-6
D315	B-7
D316	C-7
D317	B-9
D314	A-9
D319	C-6
D320	C-6
D321	B-6
D401	D-2
D402	D-3
D403	B-2
D404	C-2
D405	C-1
D406	B-1
D407	C-2
D408	C-1
D409	A-1
D504	D-5
D505	H-6
D506	F-6
D507	F-6
D508	I-6
D509	F-6
D510	F-5
D511	F-5
D512	G-5
D513	I-5
D517	F-2
D518	F-2
D519	F-2
D520	E-6
D521	I-4
D522	J-4
D523	H-4
D525	F-5
D527	F-3
D528	F-3
D529	F-5
D530	F-2
D531	E-6
D532	E-6
D533	D-2
D534	E-6
D600	G-13
D601	I-8
D602	G-13
D603	F-11
D604	J-7
D605	G-10
D606	E-11
D607	F-10
D608	F-11
D609	H-8
D611	I-7
D612	F-8
D613	I-7
D615	E-7
D616	E-9
D617	F-8
D618	F-9
D620	D-8
D621	F-9
D622	F-8
D623	F-12
D624	E-12
D625	D-12
D627	F-8
D628	G-5
D629	F-9
D630	E-10
D631	G-12
D632	F-12
D633	E-12
D634	F-11
D635	E-12
D636	D-12
D637	F-11
D638	E-11
D901	C-13
D902	C-13
D903	C-13
D904	D-13
D905	F-13
D906	I-13

PRINTED WIRING BOARDS

A [POWER SUPPLY, HV, MICON, Y/C JUNGLE]

– A Board –

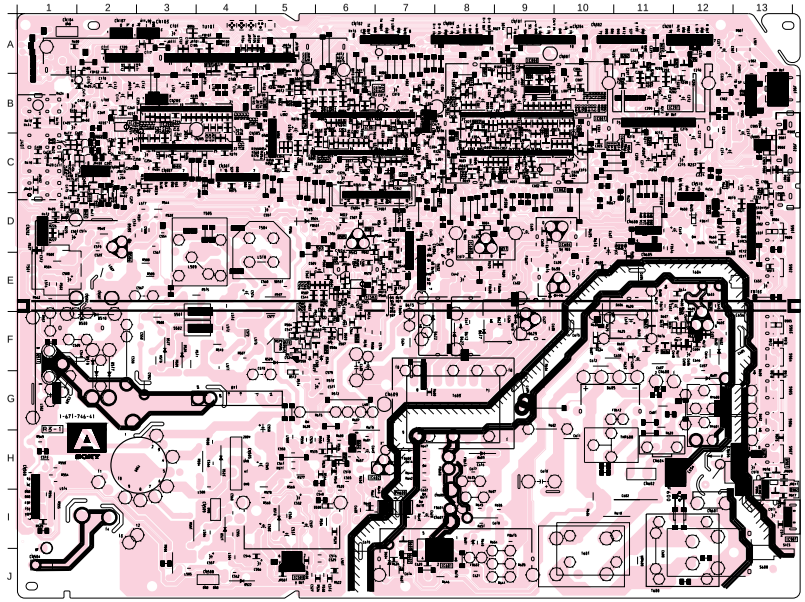

http://cxema.ru

(4) Schematic Diagram of B3 Board

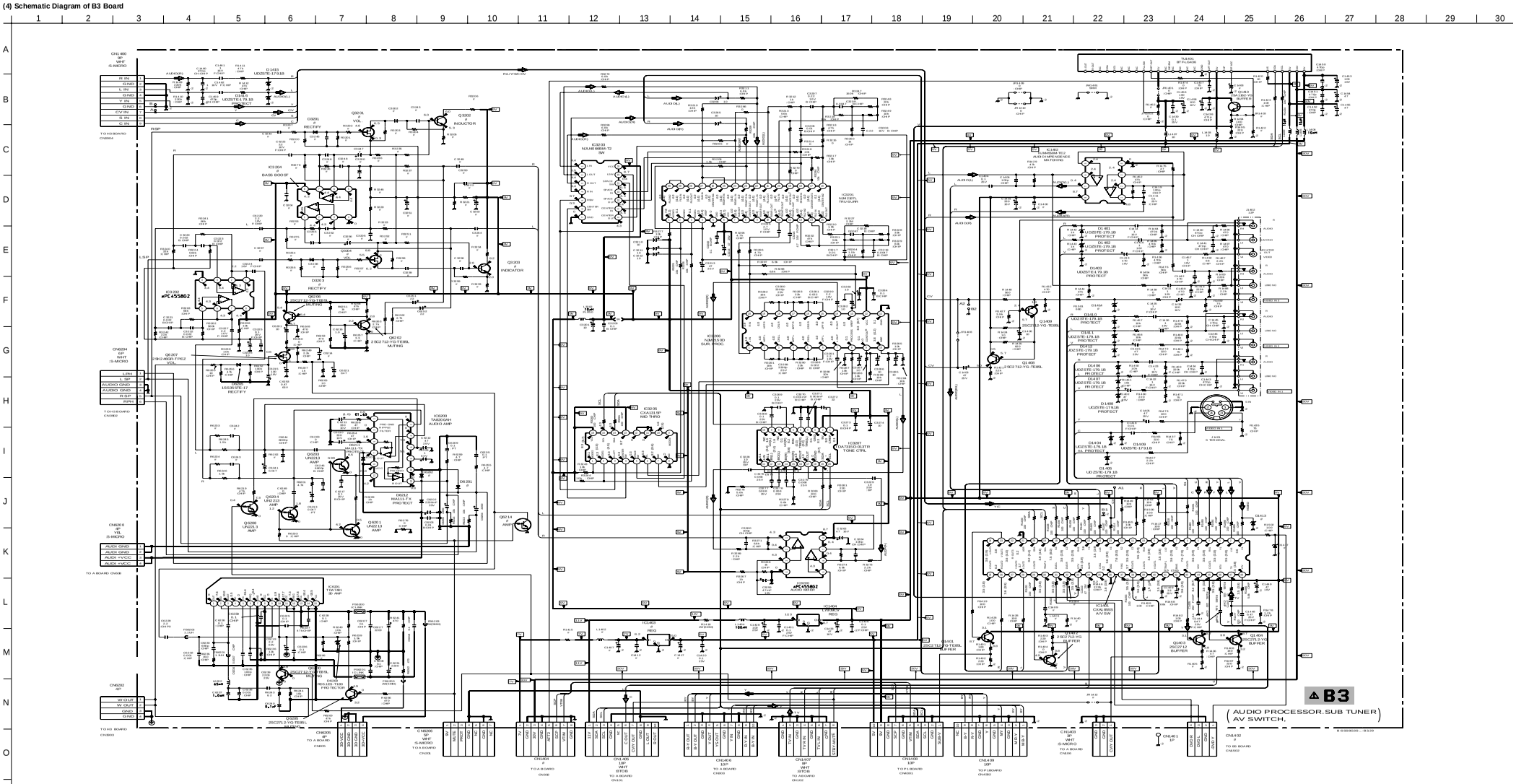

Schematic diagrams
F J2 boards
– 71 –
Schematic diagram
B3 board
– 72 –
– 73 –
– 74 –

http://cxema.ru

KV-XF29M97/XF29M67
RM-953

B3 BOARD IC3201 NJM2187L

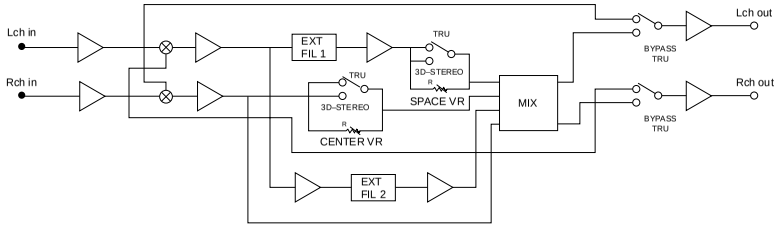

PRINTED WIRING BOARDS

B3 [AUDIO PROCESSOR, SUB TUNER AV SWITCH]

– B3 Board

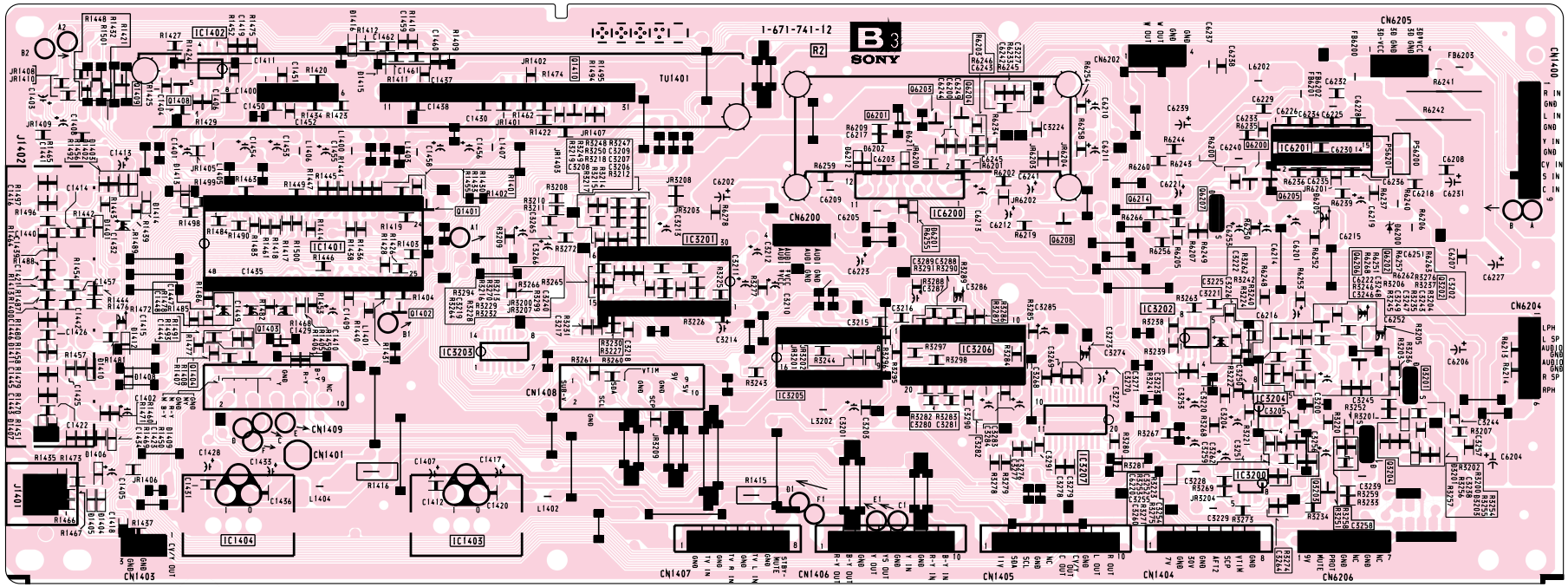

http://cxema.ru

C BOARD IC701 STV5112

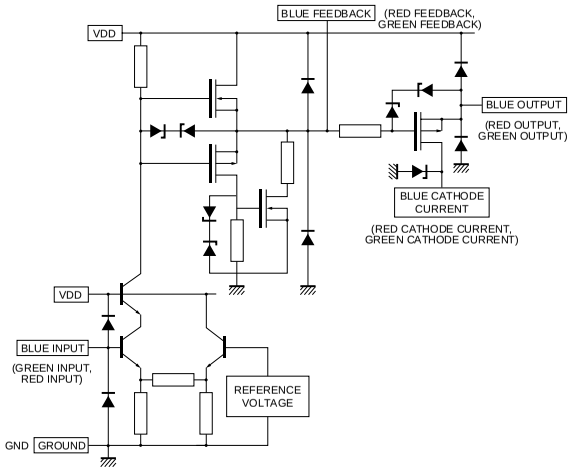

C BOARD WAVEFORMS

① PAL 132Vp-p (H)	① SECAM 158Vp-p (H)	① NTSC 142Vp-p (H)
② PAL 144Vp-p (H)	② SECAM 118Vp-p (H)	② NTSC 126Vp-p (H)
③ PAL 146Vp-p (H)	③ SECAM 160Vp-p (H)	③ NTSC 140Vp-p (H)
④ PAL/SECAM : 24.8Vp-p (H) NTSC : 25.2Vp-p (H)		

KV-XF29M97/XF29M67
RM-953

PRINTED WIRING BOARDS

C [RGB OUT]

– C Board –

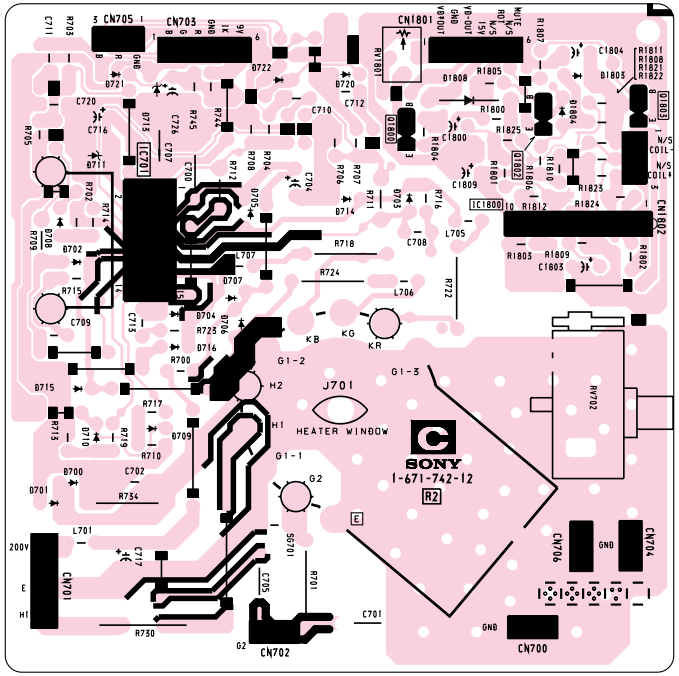

http://cxema.ru

KV-XF29M97/XF29M67 RM-953

(5) Schematic Diagram of C Board

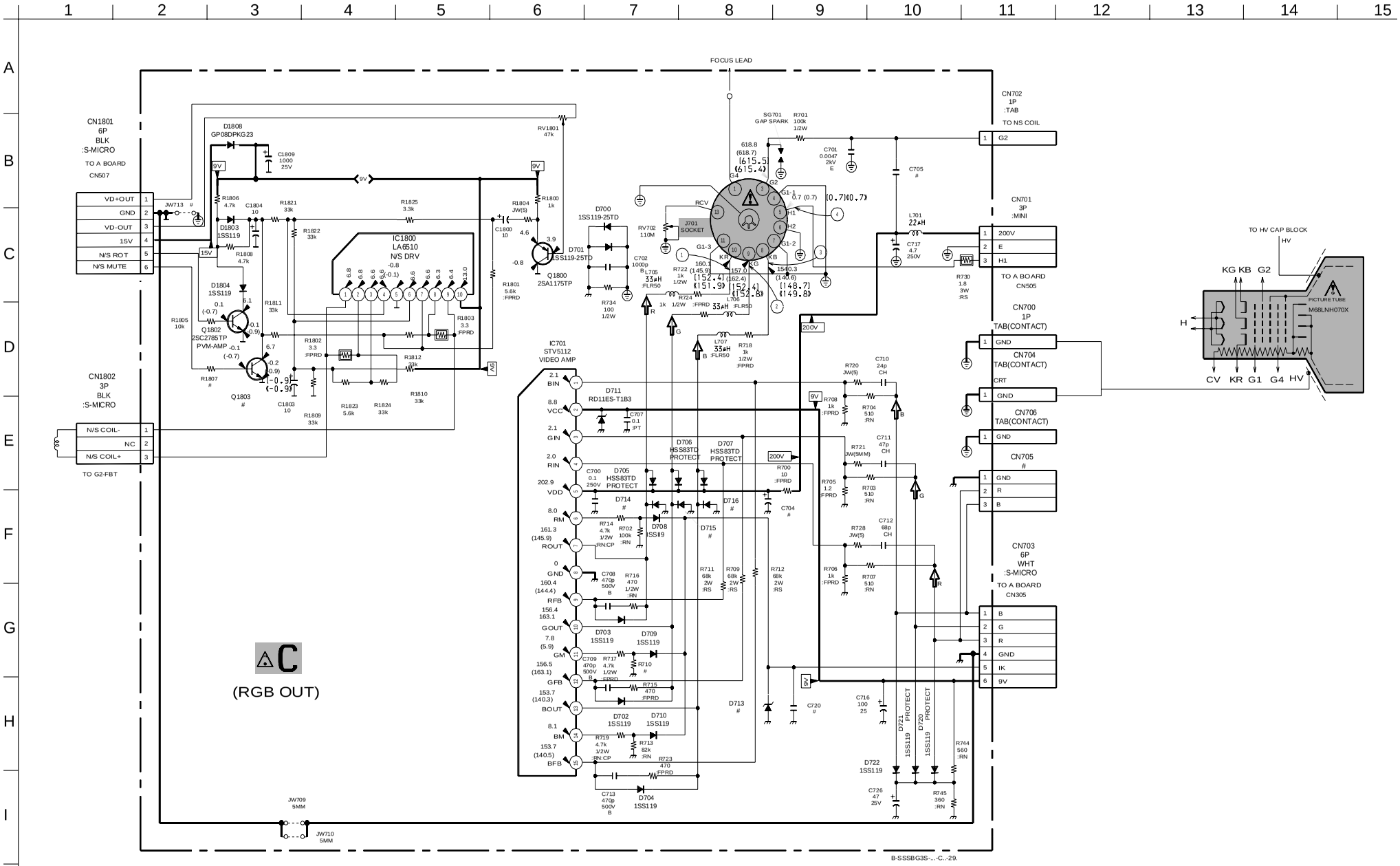

Schematic diagram
C board ➡

http://cxema.ru

KV-XF29M97/XF29M67 RM-953

PRINTED WIRING BOARDS

P1 [SINGLE PICTURE IN PICTURE]

– P1 Board (Conductor Side) –

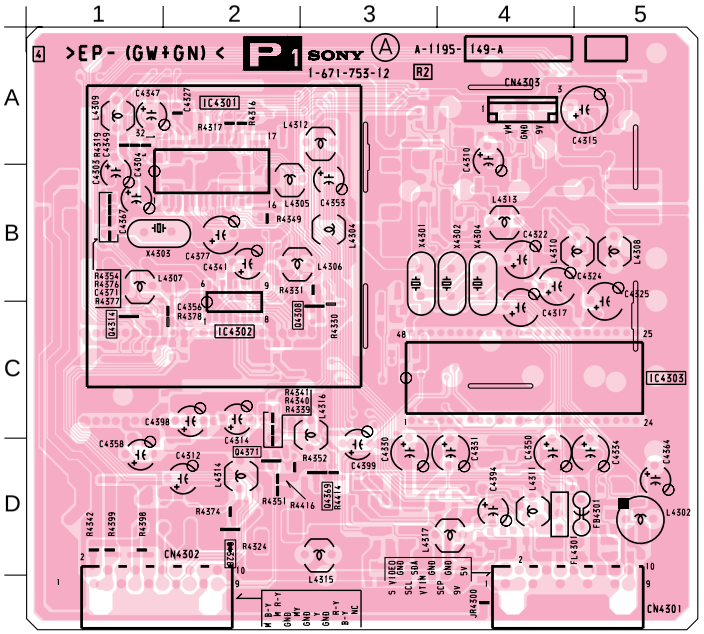

– P1 Board (Component Side) –

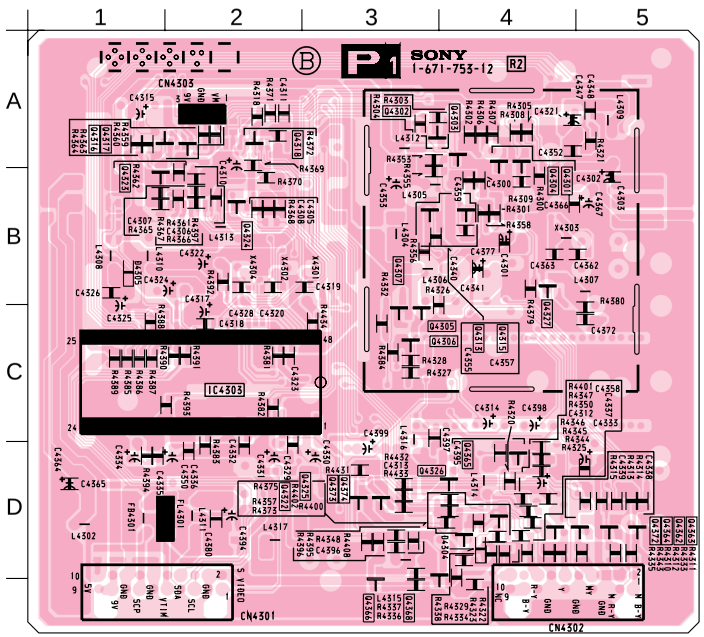

- :Pattern from the side which enables seeing.
- :Pattern from the rear side.

http://cxema.ru

(6) Schematic Diagram of P1 Board

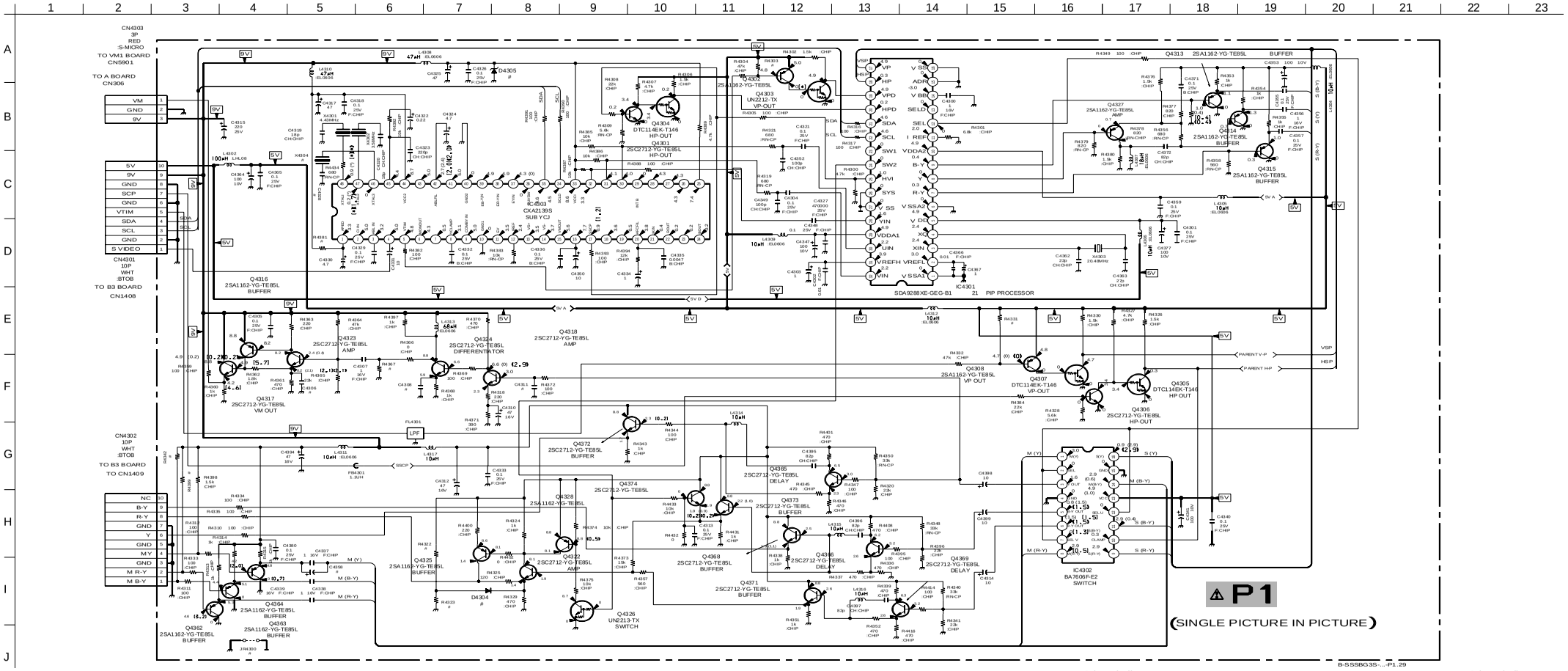

Schematic diagram
← P1 board

Schematic diagrams
B2 H3 boards →

http://cxema.ru

(7) Schematic Diagrams of B2 and H3 Boards

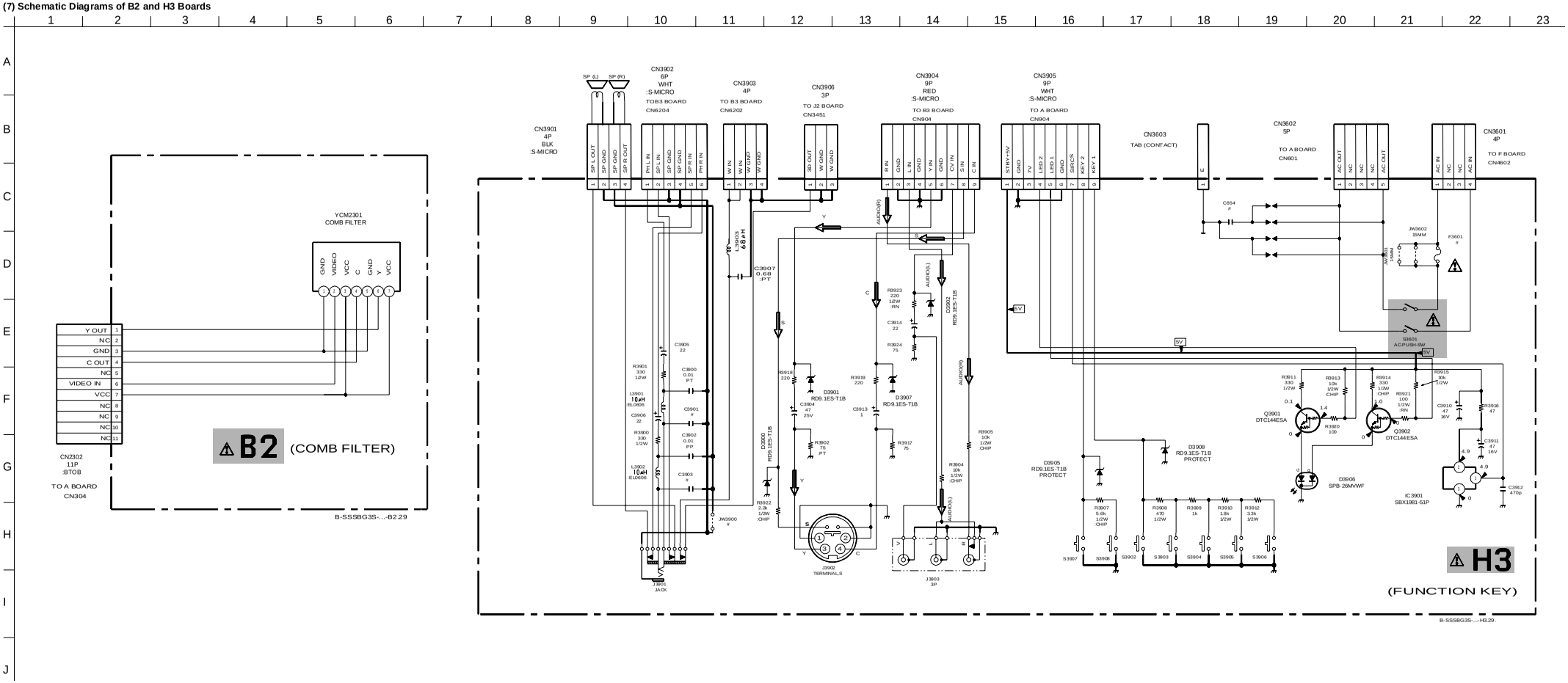

http://cxema.ru

KV-XF29M97/XF29M67
RM-953

PRINTED WIRING BOARDS

B2 [COMB FILTER]

H3 [FUNCTION KEY]

– B2 Board –

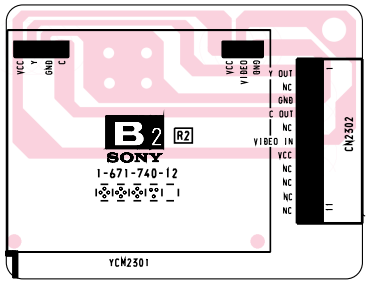

– H3 Board –

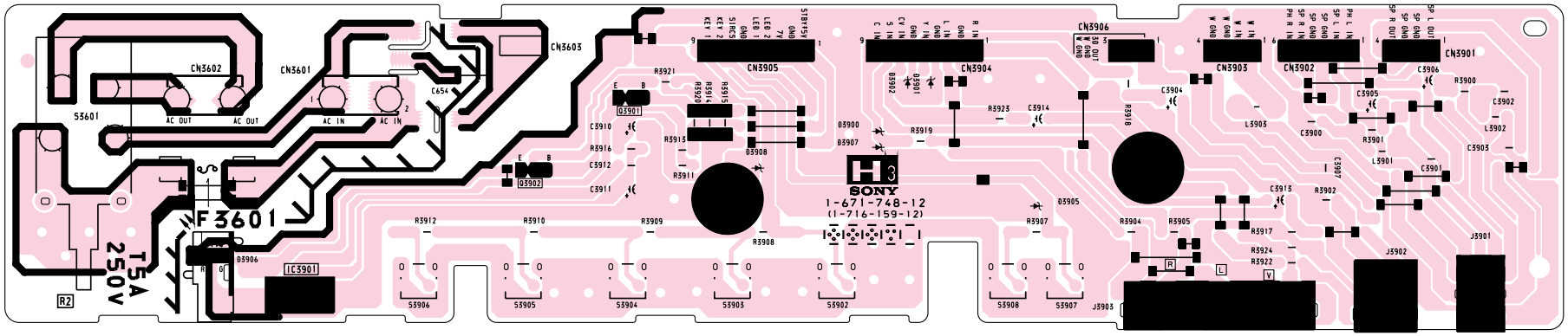

http://cxema.ru

KV-XF29M97/XF29M67 RM-953

(8) Schematic Diagram of VM1 Board

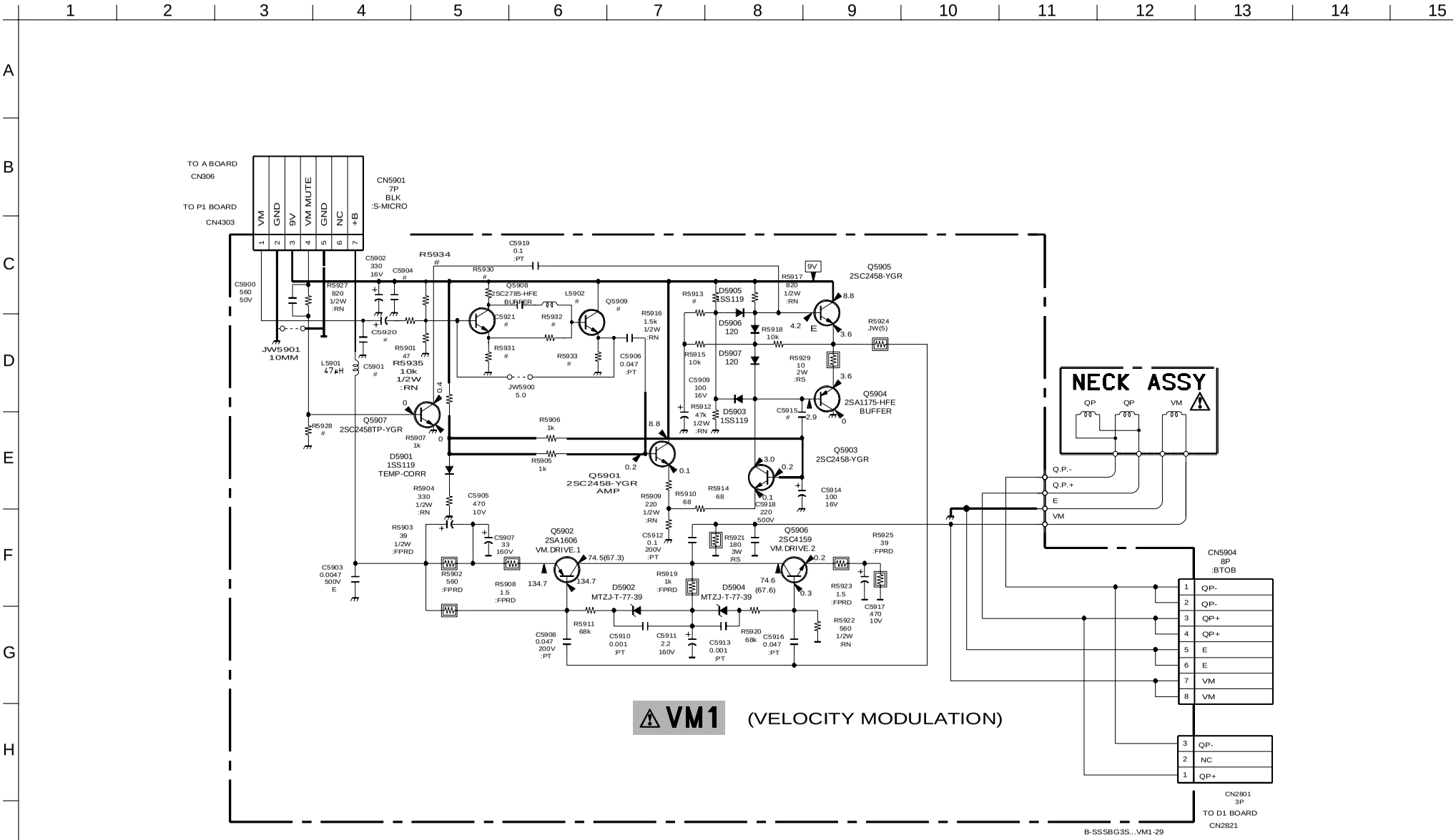

http://cxema.ru

(9) Schematic Diagram of D1 Board

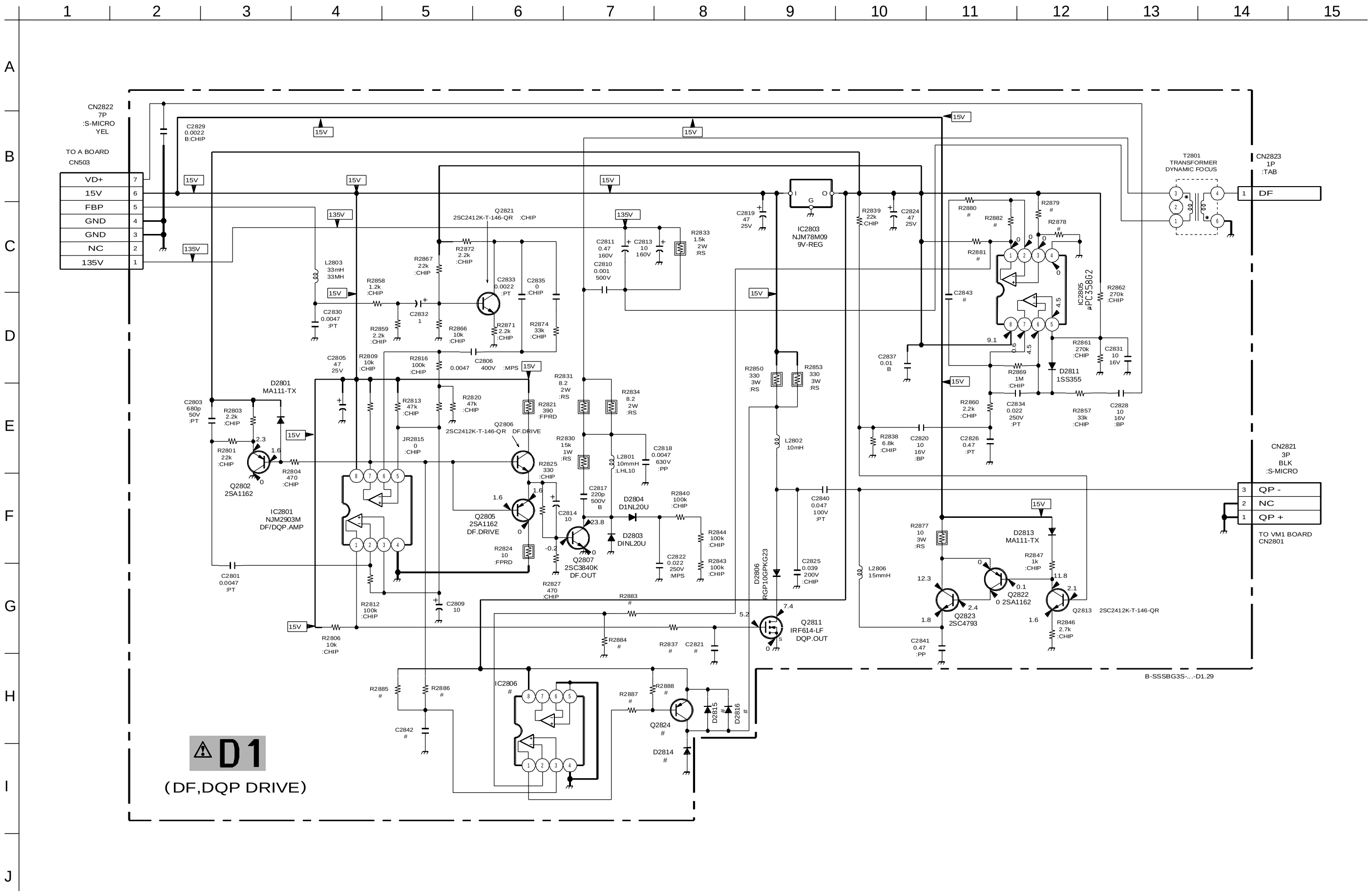

PRINTED WIRING BOARDS

VM1 [VELOCITY MODULATION]

D1 [DF,DQP DRIVE]

– VM1 Board –

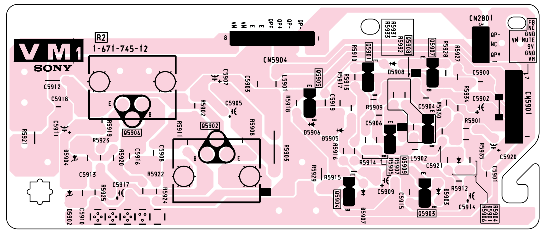

– D1 Board –

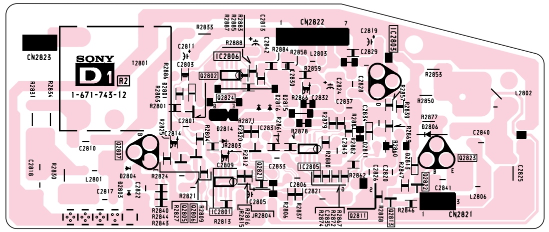

http://cxema.ru

5-5. SEMICONDUCTORS

DIODE

AU-01Z-V1
EL1Z
ERA22-08
GP08D
HSS83TD
NNCD9.1A-T1
RD33EB3T
RGP02-17EL-6433

D4SB60L

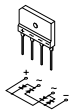

ERC04-06SE
RU4AM-T4
RS3F3

FMU-G26S
FMX-12S

DTZ10B
1SS355TE-17
DTZ-TT111-15B
UDZS-TE17-5.1B
UDZS-TE17-9.1B
MA111-(K8).SO

D5S6M

ON3171-R

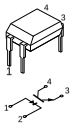

D1NS4
RD11ES-B3
RD20ES-B2
RD30ESB2
RD39ES-B2
RD5.1ES-B3
RD6.8ES-B1
11ES2-NTA2B
1SS119-25
11EQS04

5P6M

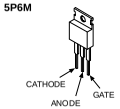

D1NL2OU-TR

ERD29-08J

LED

SPB-26MVWF

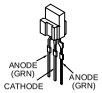

TRANSISTOR

DTA114EKA-T146
UN2111
UN2211
UN2213
UN2212
2SA1037AK-T146-R
2SA1162-G
2SC1623-L5L6
2SC2712-YG
2SD2114K

DTC144ESA
2SA1175-HFE
2SC2785-HFE

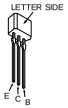

2SA1091-O

2SA1606-E
2SC4159-E
2SC4793

2SC2458-YGR
2SD2144S-UVW

2SC3840(3)

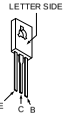

IRF614

2SK246-GR

2SK2845-LB102

2SC2688-LK

IC

CXA1315P (16PIN)
CXA1855S (48PIN)
CXA2139S (64PIN)
CXP86461-621S (64PIN)
NJM2150D (20PIN)
NJM2187L (30PIN)
M24C08-BN6 (8PIN)
STV5112 (15PIN)
TDA7481 (15PIN)

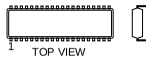

Dual In-line Package
Pin 6~98

BAF7606F (16PIN)
LM358D (8PIN)
MM1319AFBE (7PIN)
NJM2903M (8PIN)
NJU4066BM (14PIN)
TDA7315D013TR (20PIN)
µPC4558G2 (8PIN)
SDA9288XE-B121 (20PIN)

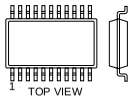

Single In -line Package
Pin 6~98

NJM78M09FA
TA7805S

SBX1981-51P

SE-135

TA8200AH

TDA8172

LA6510

STR-F6656

MARKING SIDE VIEW

Zig-zag In -line Package
Pin 6~99

RU-1P

MARKING SIDE
VIEW

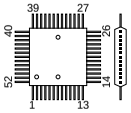

S-80743AL-A7-S

2SD2578-CA

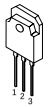

Schematic diagram
D1 board

KV-XF29M97/XF29M67
RM-953

KV-XF29M97/XF29M67
RM-953

SECTION 6
EXPLODED VIEWS

NOTE:

- Items with no part number and no description are not stocked because they are seldom required for routine service.
- The construction parts of an assembled part are indicated with a collation number in the remark column.
- Items marked " ∗ " are not stocked since they are seldom required for routine service. Some delay should be anticipated when ordering these items.

The components identified by shading and mark ⚠ are critical for safety.
Replace only with part number specified.

6-1. SPEAKER BRACKET

■: 7-685-663-71 SCREW +BVTP 4 × 16
●: 7-685-648-79 SCREW +BVTP 3 × 12

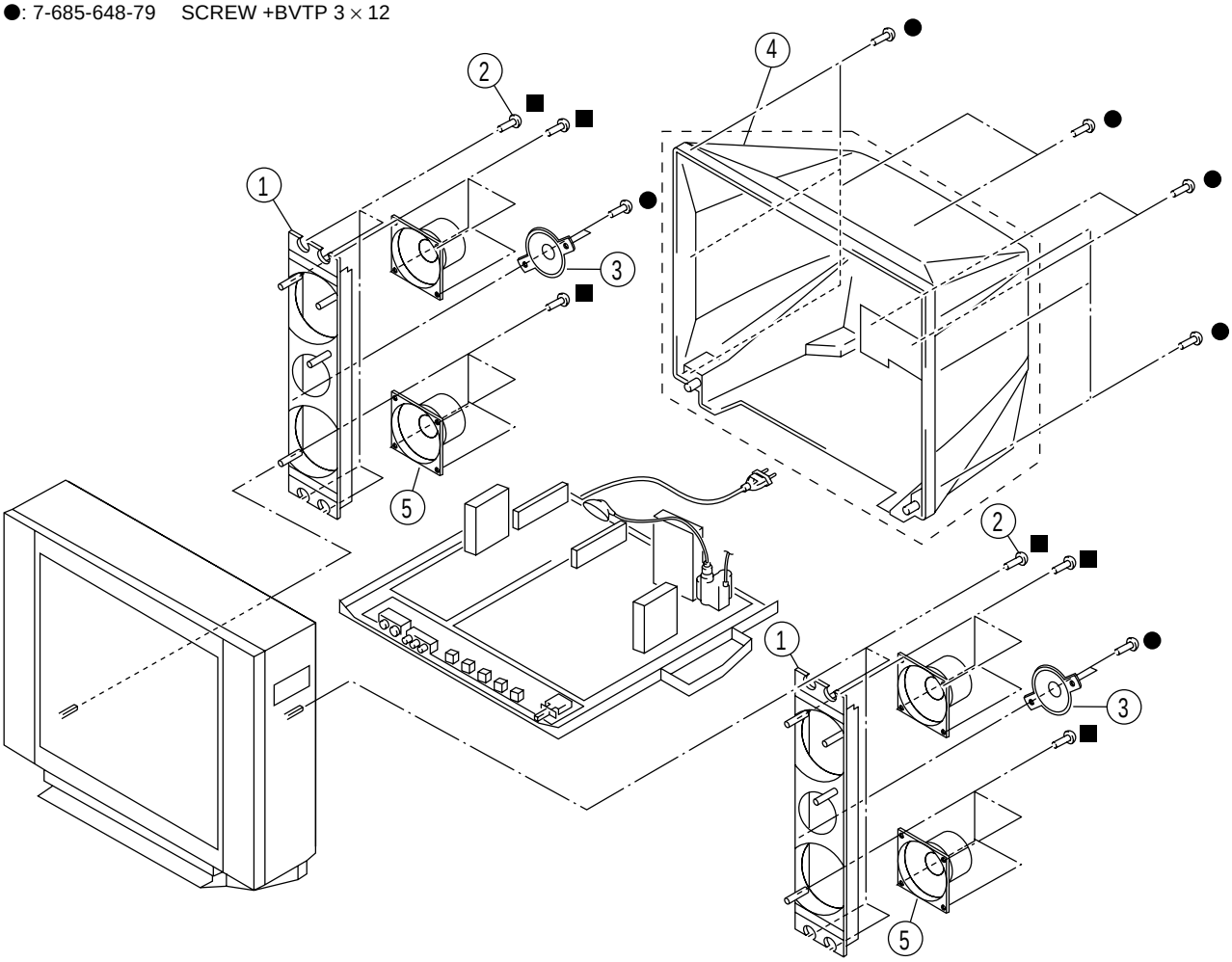

REF. NO.	PART NO.	DESCRIPTION	REMARK
1	4-065-512-02	BRACKET, SPEAKER	
2	4-302-404-03	SCREW (WASHER HEAD) (+P 4X16)	
3	1-529-190-11	SPEAKER (5CM)	
4	⚠ 4-065-506-04	COVER, REAR	
5	1-529-179-11	SPEAKER (8CM)	

http://cxema.ru

6-2. CHASSIS

●: 7-685-648-71 SCREW BVTP 3 × 12
■: 7-685-663-71 SCREW BVTP 4 × 16

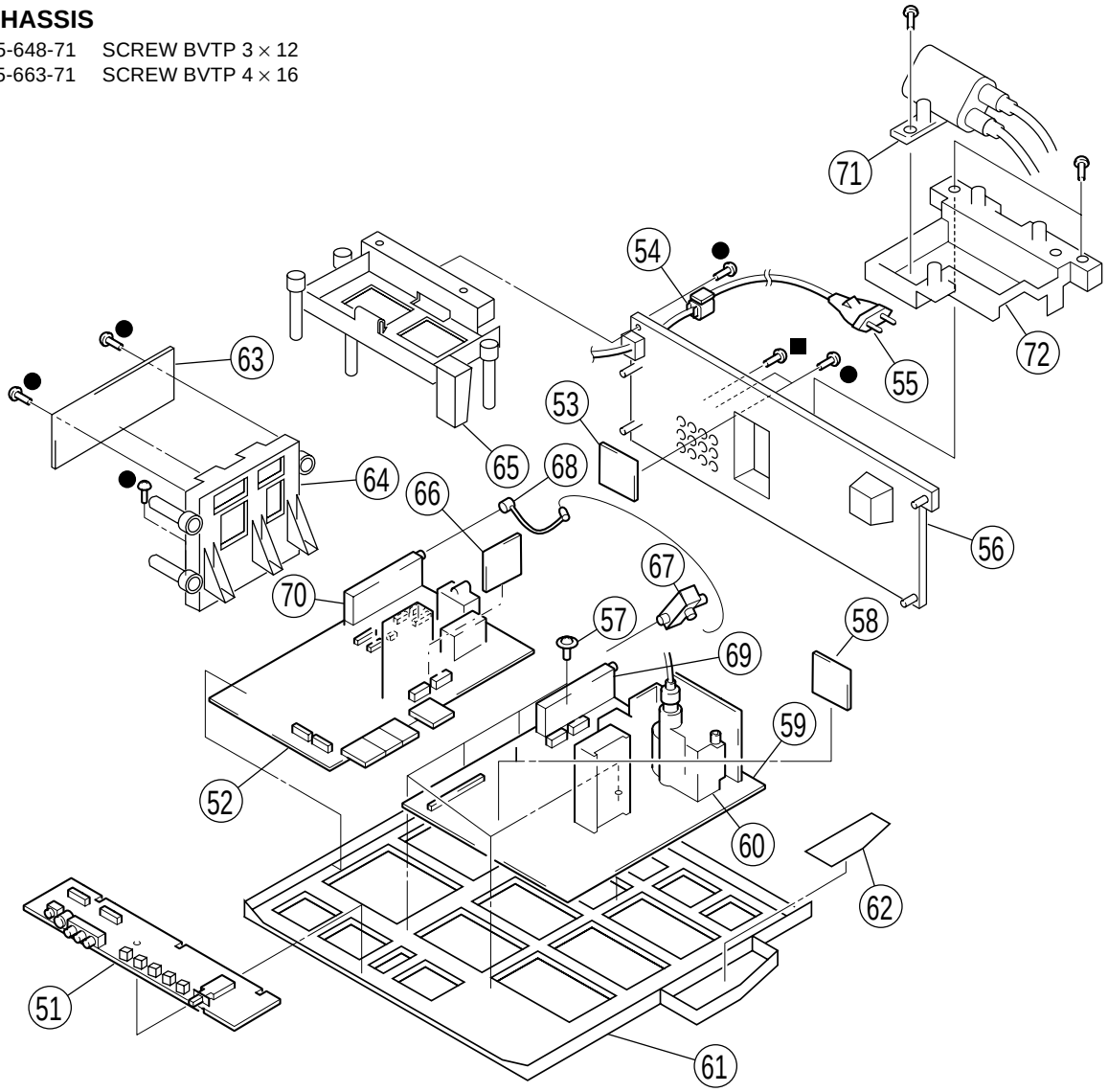

REF. NO.		PART NO.	DESCRIPTION	REMARK
51	*	A-1372-772-A	H3 BOARD, MOUNTED	
52	*	A-1135-105-A	B3 BOARD, COMPLETE	
53	*	A-1388-243-A	J2 BOARD, MOUNTED	
54		4-022-115-21	HOLDER, AC CORD	
55	⚠	1-574-062-61	CORD, POWER (WITH CONNECTOR) 2.5A/250V	
56		4-066-684-51	BRACKET, TERMINAL	
57		4-046-797-01	SCREW (3X12), (+)BVTAP	
58	*	A-1131-417-A	B2 BOARD, MOUNTED	
59	*	A-1298-237-A	A BOARD, COMPLETE	
60	⚠	1-453-305-11	TRANSFORMER ASSY, FLYBACK (NX-4009//C6P4)	
61	*	4-066-681-04	BRACKET, MAIN	
62	*	A-1343-640-A	D1 BOARD, MOUNTED	
63	*	A-1241-361-A	F BOARD, MOUNTED	

REF. NO.		PART NO.	DESCRIPTION	REMARK
64	*	4-066-682-01	BRACKET, F PWB	
65	*	4-070-963-01	HOLDER, PWB	
66	*	A-1190-365-A	P1 BOARD, MOUNTED	
67		1-251-658-21	SPLITTER RF	
68	*	1-534-630-51	P-P CABLE	
69		8-598-452-20	TUNER, FSS BTF-WG442	
70		8-598-508-10	TUNER, FSS BTF-LG436	
71	⚠	1-467-525-21	CAP BLOCK, HIGH-VOLTAGE	
72		4-066-680-02	BRACKET, HVC	

http://cxema.ru

6-3. PICTURE TUBE

●: 7-685-648-79 SCREW BVTP 3 × 12

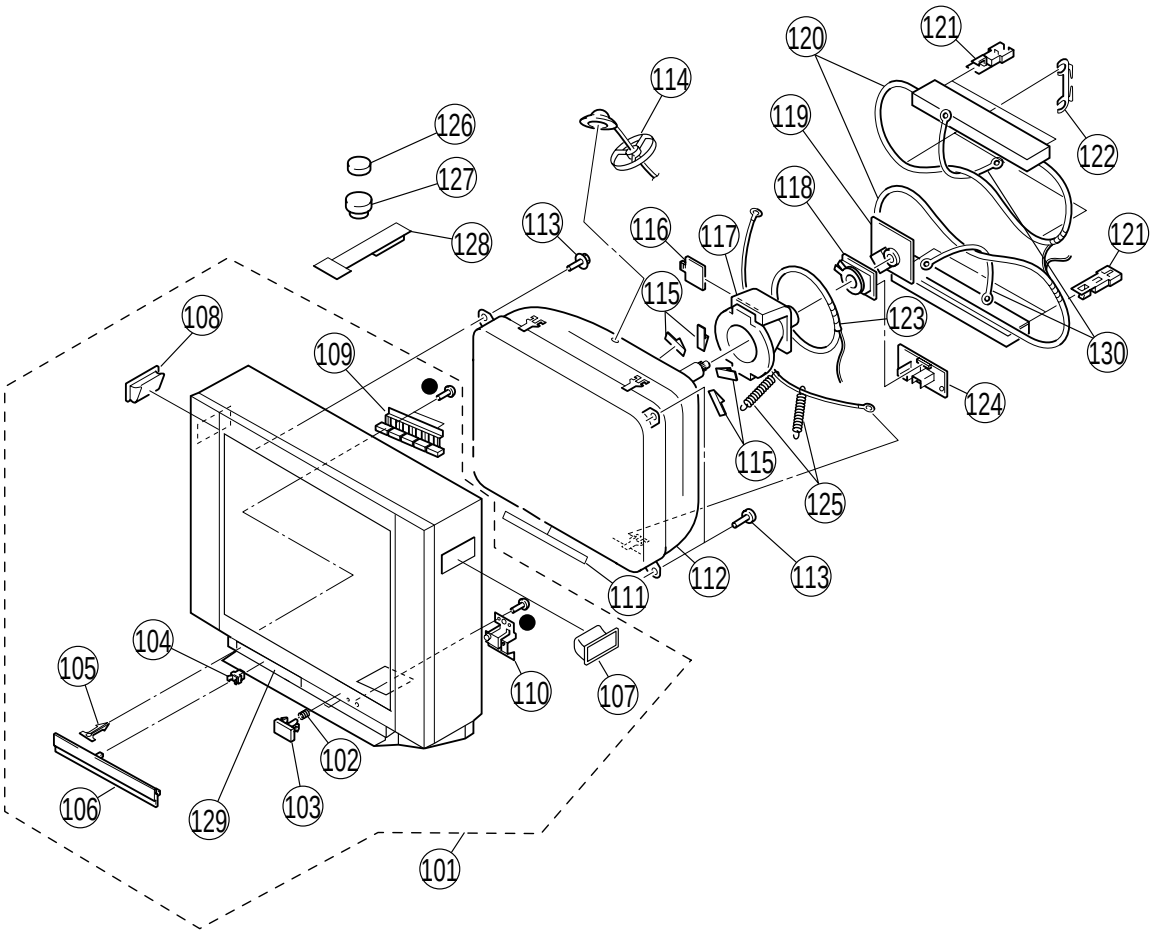

REF. NO.		PART NO.	DESCRIPTION	REMARK
101		X-4037-761-1	BEZNET ASSY	102-110,129
102		4-036-405-11	SPRING, COMPRESSION	
103		4-065-508-01	BUTTON, POWER	
104		4-047-464-01	CATCHER, PUSH	
105		4-067-062-01	DAMPER	
106		4-068-602-52	DOOR, CONTROL	
107		X-4035-862-4	HANDLE ASSY (R)	
108		X-4035-861-4	HANDLE ASSY (L)	
109		4-065-509-01	BUTTON, CONTROL	
110	*	4-065-510-01	GUIDE, LIGHT	
111		4-054-468-01	SHEET, BLOTTING	
112	⚠	8-735-056-05	PICTURE TUBE (M68LNH070X) (KV-XF29M67)	
	⚠	8-735-057-05	PICTURE TUBE (M68LNH070X) (KV-XF29M97)	
113		4-046-765-01	SCREW, TAPPING 7+CROWN WASHER	
114	*	3-704-372-41	HOLDER, HV CABLE	
115		4-046-600-11	SPACER, DY	

REF. NO.		PART NO.	DESCRIPTION	REMARK
116		2-163-920-01	PLATE, TLH CORRECTION	
117		8-451-494-31	DEFLECTION YOKE (Y29RSA-S)	
118		8-453-011-11	NA299-M	
119	*	A-1331-906-A	C BOARD, COMPLETE	
120	⚠	1-416-495-11	COIL, DEMAGNETIC	
121	*	4-062-970-01	CLIP (29RSN), DGC	
122		4-061-369-01	HOLDER, DEGAUSE COIL	
123		1-452-896-11	COIL, NA ROTATION (RT200)	
124	*	A-1342-556-A	VM1 BOARD, COMPLETE	
125		4-369-318-61	SPRING, TENSION	
126		1-452-032-00	MAGNET,DISC	
127		1-452-094-00	CIRCULAR DISC MAGNET B	
128		4-051-734-41	PIECE B(120), CONV. CORRECT	
129		4-032-761-01	SHAFT(S), DOOR	
130		4-068-028-02	BAND, DGC	

http://cxema.ru

6-4. 3D SPEAKER

▲: 7-685-661-71 SCREW BVTP 4 × 12
■: 7-685-663-71 SCREW BVTP 4 × 16

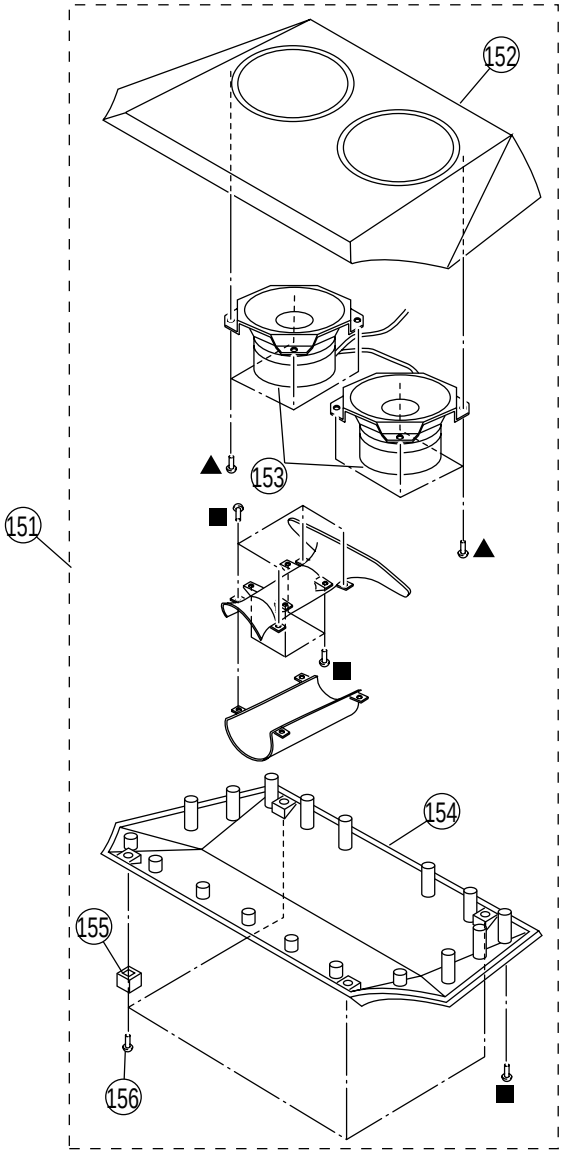

REF. NO.		PART NO.	DESCRIPTION	REMARK
151		A-1501-451-A	BOX ASSY, SPEAKER (3D)	
152	*	4-065-515-01	BOX (TP), 3D SPEAKER	
153		1-529-172-11	SPEAKER, LOUD (10CM)	
154	*	4-065-516-01	BOX (BT), 3D SPEAKER	
155	*	4-037-244-01	FOOT	
156		4-302-428-03	SCREW (WASHER HEAD) (+P 3X12)	

http://cxema.ru

SECTION 7
ELECTRICAL PARTS LIST

A

NOTE:

The components identified by shading and mark ⚠ are critical for safety.
Replace only with part number specified.

When indicating parts by reference number, please include the board name.

- Items marked " * " are not stocked since they are seldom required for routine service. Some delay should be anticipated when ordering these items.
- All variable and adjustable resistors have characteristic curve B, unless otherwise noted.
- All resistors are in ohms
- F : nonflammable

CAPACITORS
- MF : µF, PF : µµF

COILS
- MMH : mH, UH : µH

REF. NO.	PART NO.	DESCRIPTION			REMARK
*	A-1299-237-A	A BOARD COMPLETE **********			
	1-466-162-42	BLOCK, COM FILTER (CFB-4)			
*	4-040-983-41	TERMINAL BOARD (D)			
	4-382-854-11	SCREW (M3X10), P, SW (+)			
	4-382-854-21	SCREW (M3X14), P, SW (+)			
		<CAPACITOR>			
C004	1-163-001-51	CERAMIC CHIP	220PF	10%	50V
C005	1-163-001-51	CERAMIC CHIP	220PF	10%	50V
C006	1-164-004-51	CERAMIC CHIP	0.1UF	10.00%	25V
C007	1-104-664-11	ELECT	47UF	20.00%	16V
C013	1-164-232-11	CERAMIC CHIP	0.01UF	10.00%	50V
C014	1-104-664-11	ELECT	47UF	20.00%	25V
C015	1-163-009-11	CERAMIC CHIP	0.001UF	10.00%	50V
C016	1-163-243-11	CERAMIC CHIP	47PF	5.00%	50V
C017	1-163-113-00	CERAMIC CHIP	68PF	10%	50V
C019	1-104-664-11	ELECT	47UF	20.00%	25V
C022	1-163-227-51	CERAMIC CHIP	10PF	0.50PF	50V
C023	1-163-227-51	CERAMIC CHIP	10PF	0.50PF	50V
C024	1-163-227-51	CERAMIC CHIP	10PF	0.50PF	50V
C026	1-164-004-51	CERAMIC CHIP	0.1UF	10.00%	25V
C027	1-164-004-51	CERAMIC CHIP	0.1UF	10.00%	25V
C028	1-163-037-11	CERAMIC CHIP	0.022UF	10.00%	50V
C030	1-126-965-11	ELECT	22UF	20.00%	50V
C031	1-164-004-51	CERAMIC CHIP	0.1UF	10.00%	25V
C032	1-107-823-51	CERAMIC CHIP	470000PF	10%	16V
C034	1-163-031-11	CERAMIC CHIP	0.01UF		50V
C041	1-163-251-11	CERAMIC CHIP	100PF	5.00%	50V
C042	1-163-251-11	CERAMIC CHIP	100PF	5.00%	50V
C044	1-163-251-11	CERAMIC CHIP	100PF	5.00%	50V
C047	1-163-251-11	CERAMIC CHIP	100PF	5.00%	50V
C103	1-164-004-51	CERAMIC CHIP	0.1UF	10.00%	25V
C104	1-104-665-11	ELECT	100UF	20.00%	10V
C107	1-163-005-51	CERAMIC CHIP	470PF	10%	50V
C108	1-104-664-11	ELECT	47UF	20.00%	16V
C109	1-163-005-51	CERAMIC CHIP	470PF	10%	50V
C110	1-163-005-51	CERAMIC CHIP	470PF	10%	50V
C111	1-163-005-51	CERAMIC CHIP	470PF	10%	50V
C112	1-104-664-11	ELECT	47UF	20.00%	16V
C113	1-104-664-11	ELECT	47UF	20.00%	25V
C114	1-126-967-11	ELECT	47UF	20.00%	50V
C115	1-126-967-11	ELECT	47UF	20.00%	50V
C116	1-164-004-51	CERAMIC CHIP	0.1UF	10.00%	25V
C117	1-164-004-51	CERAMIC CHIP	0.1UF	10.00%	25V
C300	1-164-505-11	CERAMIC CHIP	2.2UF		16V
C301	1-126-935-11	ELECT	470UF	20.00%	16V
C302	1-163-005-51	CERAMIC CHIP	470PF	10%	50V
C303	1-125-798-91	ELECT	0.47UF	20.00%	63V
C304	1-126-967-11	ELECT	47UF	20.00%	50V
C305	1-164-004-51	CERAMIC CHIP	0.1UF	10.00%	25V
C306	1-163-233-51	CERAMIC CHIP	18PF	5.00%	50V
C307	1-163-233-51	CERAMIC CHIP	18PF	5.00%	50V
C308	1-163-125-00	CERAMIC CHIP	220PF	5.00%	50V
C309	1-126-957-11	ELECT	0.22UF	20.00%	50V
C311	1-126-963-11	ELECT	4.7UF	20.00%	50V
C312	1-164-346-51	CERAMIC CHIP	1UF	10%	16V
C313	1-164-346-51	CERAMIC CHIP	1UF	10%	16V
C314	1-164-346-51	CERAMIC CHIP	1UF	10%	16V
C315	1-164-004-51	CERAMIC CHIP	0.1UF	10.00%	25V
C316	1-126-934-11	ELECT	220UF	20.00%	16V
C317	1-164-004-51	CERAMIC CHIP	0.1UF	10.00%	25V
C318	1-163-031-11	CERAMIC CHIP	0.01UF		50V
C319	1-163-031-11	CERAMIC CHIP	0.01UF		50V
C320	1-163-031-11	CERAMIC CHIP	0.01UF		50V
C322	1-163-005-51	CERAMIC CHIP	470PF	10%	50V
C323	1-126-965-11	ELECT	22UF	20.00%	50V
C324	1-163-017-00	CERAMIC CHIP	0.0047UF	10.00%	50V
C325	1-125-799-91	ELECT	1UF	20.00%	63V
C327	1-126-965-11	ELECT	22UF	20.00%	50V
C328	1-164-004-51	CERAMIC CHIP	0.1UF	10.00%	25V
C329	1-126-965-11	ELECT	22UF	20.00%	50V
C330	1-164-004-51	CERAMIC CHIP	0.1UF	10.00%	25V
C331	1-125-805-91	ELECT	4.7UF	20.00%	50V
C332	1-125-805-91	ELECT	4.7UF	20.00%	50V
C335	1-164-004-51	CERAMIC CHIP	0.1UF	10.00%	25V
C336	1-164-004-51	CERAMIC CHIP	0.1UF	10.00%	25V
C337	1-125-800-91	ELECT	2.2UF	20.00%	63V
C338	1-163-017-00	CERAMIC CHIP	0.0047UF	10.00%	50V
C341	1-115-340-51	CERAMIC CHIP	0.22UF	10.00%	25V
C342	1-163-125-00	CERAMIC CHIP	220PF	5.00%	50V
C502	1-163-145-00	CERAMIC CHIP	0.0015UF	5.00%	50V
C503	1-125-797-91	ELECT	10UF	20.00%	50V
C506	1-107-638-11	ELECT	33UF	20.00%	160V
C507	1-161-830-00	CERAMIC	0.0047UF		500V
C510	1-102-112-00	CERAMIC	330PF	10.00%	50V
C513	1-163-263-51	CERAMIC CHIP	330PF	10%	50V
C514	1-106-383-00	MYLAR	0.047UF	10.00%	200V
C517	1-164-182-11	CERAMIC CHIP	3300PF	10%	50V
C518	1-104-665-11	ELECT	100UF	20.00%	10V
C519	1-102-212-00	CERAMIC	820PF	10.00%	500V
C521	1-126-934-11	ELECT	220UF	20.00%	16V
C522	1-126-933-11	ELECT	100UF	20.00%	16V
C523	1-102-002-00	CERAMIC	680PF	10.00%	500V
C524	1-126-967-11	ELECT	47UF	20.00%	50V
C526	1-130-495-00	MYLAR	0.1UF	5.00%	50V

http://cxema.ru

The components identified by shading and mark ⚠ are critical for safety. Replace only with part number specified.

A

REF. NO.	PART NO.	DESCRIPTION			REMARK
C527	1-102-820-00	CERAMIC	330PF	5.00%	50V
C528	1-162-116-00	CERAMIC	680PF	10.00%	2KV
C530	1-137-372-11	MYLAR	0.022UF	5.00%	50V
C531	1-107-903-11	ELECT	2.2UF	20.00%	50V
C532	1-126-941-11	ELECT	470UF	20.00%	25V
C533	1-126-941-11	ELECT	470UF	20.00%	25V
C536	1-136-165-00	MYLAR	0.1UF	5.00%	50V
C537	1-126-969-11	ELECT	220UF	20.00%	50V
C538	1-136-617-11	FILM	0.019UF	3.00%	2KV
C539	1-129-723-00	FILM	0.056UF	5.00%	630V
C540	1-136-171-00	MYLAR	0.33UF	5.00%	50V
C546	1-165-319-11	CERAMIC CHIP	0.1UF		50V
C549	1-163-017-00	CERAMIC CHIP	0.0047UF	10.00%	50V
C550	1-106-220-00	MYLAR	0.1UF	10.00%	100V
C551	1-125-799-91	ELECT	1UF	20.00%	63V
C552	1-162-116-00	CERAMIC	680PF	10.00%	2KV
C553	1-162-116-00	CERAMIC	680PF	10.00%	2KV
C554	1-137-417-11	MYLAR	0.0047UF	10.00%	200V
C556	1-126-941-11	ELECT	470UF	20.00%	25V
C557	1-126-941-11	ELECT	470UF	20.00%	25V
C558	1-123-024-21	ELECT	33UF		160V
C560	1-102-228-00	CERAMIC	470PF	10.00%	500V
C561	1-129-898-00	FILM	0.0022UF	5.00%	630V
C562	1-102-228-00	CERAMIC	470PF	10.00%	500V
C564	1-163-038-00	CERAMIC CHIP	0.1UF		25V
C565	1-107-655-11	ELECT	47UF	20.00%	250V
C566	1-102-244-00	CERAMIC	220PF	10.00%	500V
C567	1-115-520-11	FILM	0.68UF	5.00%	250V
C568	1-102-228-00	CERAMIC	470PF	10.00%	500V
C570	1-115-522-11	FILM	1UF	5.00%	250V
C572	1-117-661-21	FILM	0.15UF	5.00%	250V
C573	1-106-387-00	MYLAR	0.068UF	10.00%	200V
C574	1-104-709-11	ELECT	4.7UF		160V
C576	1-130-495-00	MYLAR	0.1UF	5.00%	50V
C577	1-106-395-00	MYLAR	0.15UF	10.00%	200V
C582	1-164-004-51	CERAMIC CHIP	0.1UF	10.00%	25V
C584	1-163-251-11	CERAMIC CHIP	100PF	5.00%	50V
C586	1-163-251-11	CERAMIC CHIP	100PF	5.00%	50V
C600 ⚠	1-104-705-11	MYLAR	0.1UF	20.00%	250V
C601	1-130-338-91	FILM	0.01UF	5.00%	630V
C602 ⚠	1-104-705-11	MYLAR	0.1UF	20.00%	250V
C603	1-104-664-11	ELECT	47UF	20.00%	25V
C604	1-163-009-11	CERAMIC CHIP	0.001UF	10.00%	50V
C605 ⚠	1-119-886-51	CERAMIC	470PF	10.00%	250V
C606 ⚠	1-119-886-51	CERAMIC	470PF	10.00%	250V
C607	1-161-830-00	CERAMIC	0.0047UF	99%	500V
C608	1-161-830-00	CERAMIC	0.0047UF	99%	500V
C609	1-126-968-11	ELECT	100UF	20.00%	50V
C610	1-125-797-91	ELECT	10UF	20.00%	50V
C611	1-161-830-00	CERAMIC	0.0047UF	99%	500V
C612	1-161-830-00	CERAMIC	0.0047UF	99%	500V
C613	1-125-906-11	ELECT	560UF	20.00%	450V
C614	1-125-797-91	ELECT	10UF	20.00%	50V
C615 ⚠	1-119-886-51	CERAMIC	470PF	10.00%	250V
C616	1-130-202-00	FILM	0.022UF	5.00%	400V
C617	1-107-792-11	CERAMIC	100PF	5.00%	1KV
C618	1-125-893-11	FILM	680PF	3.00%	1.5KV

REF. NO.	PART NO.	DESCRIPTION			REMARK
C619 ⚠	1-119-886-51	CERAMIC	470PF	10.00%	250V
C620	1-163-133-00	CERAMIC CHIP	470PF	10%	50V
C621	1-102-114-00	CERAMIC	470PF	10.00%	50V
C622	1-102-119-00	CERAMIC	0.0015UF	10.00%	50V
C623	1-104-665-11	ELECT	100UF	20.00%	25V
C624	1-125-772-91	CERAMIC	1500PF	10.00%	2KV
C625	1-102-002-00	CERAMIC	680PF	10.00%	500V
C626	1-102-002-00	CERAMIC	680PF	10.00%	500V
C627	1-102-002-00	CERAMIC	680PF	10.00%	500V
C628	1-126-952-11	ELECT	1000UF	20.00%	35V
C629	1-125-797-91	ELECT	10UF	20.00%	50V
C630	1-124-347-51	ELECT	100UF	20.00%	160V
C631	1-128-550-11	ELECT	2200UF	20.00%	50V
C632	1-126-936-11	ELECT	3300UF	20.00%	16V
C633	1-104-999-11	MYLAR	0.1UF	10.00%	200V
C634	1-126-933-11	ELECT	100UF	20.00%	16V
C635	1-104-665-11	ELECT	100UF	20.00%	10V
C636	1-104-760-51	CERAMIC CHIP	0.047UF	10.00%	50V
C638	1-161-830-00	CERAMIC	0.0047UF		500V
C641	1-102-002-00	CERAMIC	680PF	10.00%	500V
C642	1-126-943-11	ELECT	2200UF	20.00%	25V
C643	1-104-665-11	ELECT	100UF	20.00%	10V
C644	1-104-331-11	CERAMIC	0.0022UF	10.00%	1KV
C645	1-137-605-11	MYLAR	0.01UF	10.00%	250V
C646	1-107-679-91	ELECT	10UF	20.00%	450V
C647	1-163-275-11	CERAMIC CHIP	0.001UF	5.00%	50V
C649	1-126-940-11	ELECT	330UF	20.00%	25V
C650	1-163-275-11	CERAMIC CHIP	0.001UF	5.00%	50V
C651	1-163-133-00	CERAMIC CHIP	470PF	10%	50V
C652	1-126-965-11	ELECT	22UF	20.00%	50V
C653	1-104-664-11	ELECT	47UF	20.00%	25V
C655 ⚠	1-119-886-51	CERAMIC	470PF	10.00%	250V
C657	1-101-821-00	CERAMIC	0.0022UF		500V
C912	1-164-004-51	CERAMIC CHIP	0.1UF	10.00%	25V
C913	1-104-665-11	ELECT	100UF	20.00%	10V

<CONNECTOR>

CN101	*	1-779-890-11	CONNECTOR, BOARD TO BOARD 10P
CN102	*	1-779-889-11	CONNECTOR, BOARD TO BOARD 8P
CN104		1-695-915-11	TAB (CONTACT)
CN105	*	1-508-784-21	PIN, CONNECTOR (5MM PITCH) 1P
CN106	*	1-564-506-11	PLUG, CONNECTOR 3P
CN201	*	1-564-508-11	PLUG, CONNECTOR 5P
CN202	*	1-508-847-00	PIN, CONNECTOR 4P
CN302	*	1-779-889-11	CONNECTOR, BOARD TO BOARD 8P
CN303	*	1-779-890-11	CONNECTOR, BOARD TO BOARD 10P
CN304	*	1-766-955-11	CONNECTOR, BOARD TO BOARD 11P
CN305	*	1-564-509-11	PLUG, CONNECTOR 6P
CN501	*	1-508-784-21	PIN, CONNECTOR (5MM PITCH) 1P
CN502	*	1-508-784-21	PIN, CONNECTOR (5MM PITCH) 1P
CN503	*	1-564-510-11	PLUG, CONNECTOR 7P
CN504		1-695-915-11	TAB (CONTACT)
CN505		1-508-766-00	PIN, CONNECTOR (5MM PITCH) 4P
CN507	*	1-564-509-11	PLUG, CONNECTOR 6P
CN508		1-695-915-11	TAB (CONTACT)
CN509		1-695-915-11	TAB (CONTACT)
CN601	*	1-580-843-11	PIN, CONNECTOR (POWER)

http://cxema.ru

A

REF. NO.	PART NO.	DESCRIPTION	REMARK
CN602 *	1-508-786-00	PIN, CONNECTOR (5MM PITCH) 2P	
CN603 *	1-508-784-21	PIN, CONNECTOR (5MM PITCH) 1P	
CN604 *	1-573-963-11	PIN, CONNECTOR (PC BOARD) 3P	
CN605 *	1-564-507-11	PLUG, CONNECTOR 4P	
CN608 *	1-564-507-11	PLUG, CONNECTOR 4P	
CN904 *	1-564-512-11	PLUG, CONNECTOR 9P	
		<DIODE>	
D001	8-719-988-61	DIODE 1SS355TE-17	
D002	8-719-988-61	DIODE 1SS355TE-17	
D004	1-216-295-61	SHORT CHIP 0	
D005	8-719-988-61	DIODE 1SS355TE-17	
D006	1-216-295-61	SHORT CHIP 0	
D100	8-719-073-01	DIODE MA111-(K8).SO	
D300	1-216-295-61	SHORT CHIP 0	
D301	8-719-988-61	DIODE 1SS355TE-17	
D303	8-719-988-61	DIODE 1SS355TE-17	
D304	8-719-988-61	DIODE 1SS355TE-17	
D305	8-719-988-61	DIODE 1SS355TE-17	
D306	8-719-988-61	DIODE 1SS355TE-17	
D307	8-719-988-61	DIODE 1SS355TE-17	
D308	8-719-988-61	DIODE 1SS355TE-17	
D309	8-719-069-54	DIODE UDZS-TE17-5.1B	
D311	8-719-988-61	DIODE 1SS355TE-17	
D312	8-719-988-61	DIODE 1SS355TE-17	
D313	8-719-988-61	DIODE 1SS355TE-17	
D320	8-719-069-60	DIODE UDZS-TE17-9.1B	
D321	8-719-069-60	DIODE UDZS-TE17-9.1B	
D504	8-719-302-43	DIODE EL1Z	
D505	8-719-988-61	DIODE 1SS355TE-17	
D506	8-719-911-19	DIODE 1SS119-25TD	
D507	8-719-988-61	DIODE 1SS355TE-17	
D508	8-719-988-61	DIODE 1SS355TE-17	
D509	1-216-073-61	RES-CHIP 10G 5%	1/10W
D510	8-719-988-61	DIODE 1SS355TE-17	
D511	8-719-988-61	DIODE 1SS355TE-17	
D512	8-719-988-61	DIODE 1SS355TE-17	
D513	8-719-908-03	DIODE GP08DPKG23	
D517	8-719-312-71	DIODE RS3FS	
D518	8-719-074-35	DIODE RU4AM-T4	
D519	8-719-312-71	DIODE RS3FS	
D521	8-719-302-43	DIODE EL1Z	
D522	8-719-028-45	DIODE D2L20U-F	
D523	8-719-302-43	DIODE EL1Z	
D527	8-719-908-03	DIODE GP08DPKG23	
D528	8-719-908-03	DIODE GP08DPKG23	
D531	8-719-988-61	DIODE 1SS355TE-17	
D532	8-719-988-61	DIODE 1SS355TE-17	
D534	8-719-988-61	DIODE 1SS355TE-17	
D600	8-719-911-19	DIODE 1SS119-25TD	
D602	8-719-911-19	DIODE 1SS119-25TD	
D603	8-719-150-92	DIODE RD33ES-T1B2	
D604	8-719-028-72	DIODE RGP02-17PKG23	
D605	8-719-510-53	DIODE D4SB60L	
D606	8-719-108-18	DIODE TF541M	
D607	8-719-073-01	DIODE MA111-(K8).SO	

REF. NO.	PART NO.	DESCRIPTION	REMARK
D608	8-719-110-53	DIODE RD20ES-T1B2	
D609	8-719-311-31	DIODE RU1P-V1	
D610	8-719-210-21	DIODE 11EQS04-NTA1B	
D611	8-719-046-74	DIODE AU-01Z-V1	
D612	8-719-071-38	DIODE D5S6M	
D613	8-719-046-74	DIODE AU-01Z-V1	
D614	8-719-046-74	DIODE AU-01Z-V1	
D620	8-719-110-72	DIODE RD30ES-T1B1	
D621	8-719-071-38	DIODE D5S6M	
D622	8-719-071-39	DIODE FMU-G26S	
D623	8-719-978-65	DIODE DTZ-TT11-15B	
D624	8-719-073-01	DIODE MA111-(K8).SO	
D625	8-719-977-28	DIODE DTZ10B	
D628	8-719-911-19	DIODE 1SS119-25TD	
D629	8-719-052-74	DIODE FMX-12S	
D630	8-719-052-74	DIODE FMX-12S	
D631	8-719-068-00	DIODE ERC04-06SE	
D632	8-719-068-00	DIODE ERC04-06SE	
D633	8-719-948-45	DIODE ERA22-08TP3	
D634	8-719-073-01	DIODE MA111-(K8).SO	
D635	8-719-073-01	DIODE MA111-(K8).SO	
D636	8-719-510-02	DIODE D1NS4-TA2	
D637	8-719-109-96	DIODE RD6.8ES-T1B1	
D638	8-719-200-82	DIODE 11ES2-TB5	
		<CONNECTOR>	
DY1 *	1-580-798-11	CONNECTOR PIN (DY) 6P	
		<FERRITE BEAD>	
FB101	1-216-295-61	SHORT CHIP 0	
FB102	1-216-295-61	SHORT CHIP 0	
FB501	1-410-397-21	FERRITE 1.1UH	
FB502	1-410-397-21	FERRITE 1.1UH	
FB600	1-410-397-21	FERRITE 1.1UH	
FB601	1-410-397-21	FERRITE 1.1UH	
FB602	1-410-397-21	FERRITE 1.1UH	
FB603	1-410-397-21	FERRITE 1.1UH	
FB604	1-412-911-31	FERRITE 0UH	
FB605	1-412-911-31	FERRITE 0UH	
FB606	1-412-911-31	FERRITE 0UH	
FB607	1-410-397-21	FERRITE 1.1UH	
FB608	1-412-911-31	FERRITE 0UH	
FB611	1-410-397-21	FERRITE 1.1UH	
FB612	1-410-397-21	FERRITE 1.1UH	
FB613	1-410-397-21	FERRITE 1.1UH	
FB615	1-410-397-21	FERRITE 1.1UH	
		<IC>	
IC001	8-752-905-64	IC CXP86461-621S	
IC002	8-759-371-21	IC MM1319AFBE	
IC003	8-759-672-78	IC M24C08-BN6	
IC100	8-759-042-02	IC S-80743AL-A7-T1	
IC301	8-752-090-41	IC CXA2139S	

http://cxema.ru

The components identified by shading and mark ⚠ are critical for safety. Replace only with part number specified.

A

REF. NO.	PART NO.	DESCRIPTION		REMARK
IC502	8-759-700-07	IC NJM2903M-TE2		
IC503	8-759-980-58	IC TDA8172		
IC601	8-749-014-48	IC STR-F6656		
IC602	8-749-920-61	IC SE-135N		
IC603	8-759-701-59	IC NJM78M09FA		
IC604	8-759-231-53	IC TA7805S		
		<CHIP CONDUCTOR>		
JR001	1-216-295-61	SHORT CHIP	0	
JR002	1-216-295-61	SHORT CHIP	0	
JR004	1-216-295-61	SHORT CHIP	0	
JR005	1-216-295-61	SHORT CHIP	0	
JR006	1-216-295-61	SHORT CHIP	0	
JR007	1-216-295-61	SHORT CHIP	0	
JR008	1-216-295-61	SHORT CHIP	0	
JR010	1-216-295-61	SHORT CHIP	0	
JR012	1-216-295-61	SHORT CHIP	0	
JR014	1-216-295-61	SHORT CHIP	0	
JR015	1-216-295-61	SHORT CHIP	0	
JR016	1-216-295-61	SHORT CHIP	0	
JR102	1-216-295-61	SHORT CHIP	0	
JR107	1-216-295-61	SHORT CHIP	0	
JR301	1-216-295-61	SHORT CHIP	0	
JR303	1-216-295-61	SHORT CHIP	0	
JR500	1-216-295-61	SHORT CHIP	0	
JR501	1-216-295-61	SHORT CHIP	0	
JR502	1-216-295-61	SHORT CHIP	0	
JR503	1-216-295-61	SHORT CHIP	0	
JR600	1-216-295-61	SHORT CHIP	0	
		<COIL>		
L002	1-414-856-11	INDUCTOR	10UH	
L003	1-414-180-11	INDUCTOR	3.3UH	
L005	1-414-233-22	INDUCTOR CHIP	0UH	
L101	1-414-856-11	INDUCTOR	10UH	
L102	1-414-856-11	INDUCTOR	10UH	
L103	1-414-856-11	INDUCTOR	10UH	
L104	1-414-856-11	INDUCTOR	10UH	
L105	1-414-856-11	INDUCTOR	10UH	
L301	1-414-189-31	INDUCTOR	100UH	
L302	1-414-185-41	INDUCTOR	22UH	
L501	1-412-525-31	INDUCTOR	10UH	
L502	1-422-613-11	COIL, AIR CORE		
L503	1-412-525-31	INDUCTOR	10UH	
L504	1-412-525-31	INDUCTOR	10UH	
L507	1-459-111-00	INDUCTOR	10MH	
L511	1-406-977-21	INDUCTOR	100UH	
L513	1-412-551-31	INDUCTOR	1.5MH	
L515	1-459-104-00	COIL, WITH CORE		
L518	1-414-187-11	INDUCTOR	47UH	
L601	1-412-527-11	INDUCTOR	15UH	
L905	1-414-856-11	INDUCTOR	10UH	

REF. NO.	PART NO.	DESCRIPTION				REMARK
		<PHOTO COUPLER>				
PH600 ⚠	8-749-924-35	PHOTO COUPLER ON3171-R				
		<TRANSISTOR>				
Q001	8-729-216-22	TRANSISTOR 2SA1162-YG-TE85L				
Q002	8-729-230-49	TRANSISTOR 2SC2712-YG-TE85L				
Q003	8-729-424-08	TRANSISTOR UN2111-TX				
Q004	8-729-421-22	TRANSISTOR UN2211-TX				
Q101	8-729-230-49	TRANSISTOR 2SC2712-YG-TE85L				
Q301	8-729-216-22	TRANSISTOR 2SA1162-YG-TE85L				
Q304	8-729-216-22	TRANSISTOR 2SA1162-YG-TE85L				
Q305	8-729-216-22	TRANSISTOR 2SA1162-YG-TE85L				
Q306	8-729-216-22	TRANSISTOR 2SA1162-YG-TE85L				
Q307	8-729-230-49	TRANSISTOR 2SC2712-YG-TE85L				
Q308	8-729-216-22	TRANSISTOR 2SA1162-YG-TE85L				
Q311	8-729-230-49	TRANSISTOR 2SC2712-YG-TE85L				
Q313	8-729-230-49	TRANSISTOR 2SC2712-YG-TE85L				
Q315	8-729-421-19	TRANSISTOR UN2213-TX				
Q501	8-729-216-22	TRANSISTOR 2SA1162-YG-TE85L				
Q502	8-729-216-22	TRANSISTOR 2SA1162-YG-TE85L				
Q503	8-729-230-49	TRANSISTOR 2SC2712-YG-TE85L				
Q505	8-729-931-45	TRANSISTOR IRF614				
Q506	8-729-119-80	TRANSISTOR 2SC2688-LK				
Q507	8-729-216-22	TRANSISTOR 2SA1162-YG-TE85L				
Q509	8-729-230-49	TRANSISTOR 2SC2712-YG-TE85L				
Q511	8-729-048-07	TRANSISTOR 2SD2578-CA				
Q600	8-729-119-78	TRANSISTOR 2SC2785TP-HFE				
Q601	8-729-023-22	TRANSISTOR 2SD2114KT146				
Q602	8-729-230-49	TRANSISTOR 2SC2712-YG-TE85L				
Q603	8-729-424-08	TRANSISTOR UN2111-TX				
Q604	8-729-200-17	TRANSISTOR 2SA1091R-TPE2				
Q605	8-729-044-30	TRANSISTOR 2SK2845-LB102				
Q606	8-729-230-49	TRANSISTOR 2SC2712-YG-TE85L				
Q607	8-729-922-37	TRANSISTOR 2SD2144S-TP-UVW				
Q608	8-729-230-49	TRANSISTOR 2SC2712-YG-TE85L				
		<RESISTOR>				
R001	1-414-233-22	INDUCTOR CHIP	0UH			
R002	1-216-025-61	RES-CHIP	100	5%	1/10W	
R003	1-216-073-61	RES-CHIP	10G	5%	1/10W	
R004	1-216-025-61	RES-CHIP	100	5%	1/10W	
R005	1-216-025-61	RES-CHIP	100	5%	1/10W	
R008	1-216-065-61	RES-CHIP	4.7K	5%	1/10W	
R010	1-216-065-61	RES-CHIP	4.7K	5%	1/10W	
R011	1-216-065-61	RES-CHIP	4.7K	5%	1/10W	
R012	1-216-065-61	RES-CHIP	4.7K	5%	1/10W	
R013	1-216-065-61	RES-CHIP	4.7K	5%	1/10W	
R014	1-216-025-61	RES-CHIP	100	5%	1/10W	
R015	1-216-025-61	RES-CHIP	100	5%	1/10W	
R017	1-216-049-61	RES-CHIP	1K	5%	1/10W	
R018	1-216-033-61	RES-CHIP	220	5%	1/10W	
R019	1-216-073-61	RES-CHIP	10G	5%	1/10W	
R021	1-216-073-61	RES-CHIP	10G	5%	1/10W	
R022	1-216-025-61	RES-CHIP	100	5%	1/10W	
R023	1-216-049-61	RES-CHIP	1K	5%	1/10W	

http://cxema.ru

A

REF. NO.	PART NO.	DESCRIPTION			REMARK
R024	1-216-063-61	RES-CHIP	3.9K	5%	1/10W
R025	1-216-063-61	RES-CHIP	3.9K	5%	1/10W
R026	1-216-063-61	RES-CHIP	3.9K	5%	1/10W
R027	1-216-049-61	RES-CHIP	1K	5%	1/10W
R028	1-216-073-61	RES-CHIP	10G	5%	1/10W
R029	1-216-049-61	RES-CHIP	1K	5%	1/10W
R031	1-216-049-61	RES-CHIP	1K	5%	1/10W
R032	1-216-025-61	RES-CHIP	100	5%	1/10W
R034	1-216-049-61	RES-CHIP	1K	5%	1/10W
R035	1-216-025-61	RES-CHIP	100	5%	1/10W
R036	1-216-025-61	RES-CHIP	100	5%	1/10W
R037	1-216-025-61	RES-CHIP	100	5%	1/10W
R038	1-216-049-61	RES-CHIP	1K	5%	1/10W
R040	1-216-025-61	RES-CHIP	100	5%	1/10W
R041	1-216-025-61	RES-CHIP	100	5%	1/10W
R042	1-216-295-61	SHORT CHIP	0		
R043	1-216-049-61	RES-CHIP	1K	5%	1/10W
R044	1-216-025-61	RES-CHIP	100	5%	1/10W
R045	1-414-233-22	INDUCTOR CHIP	0UH		
R046	1-216-049-61	RES-CHIP	1K	5%	1/10W
R047	1-414-233-22	INDUCTOR CHIP	0UH		
R048	1-216-073-61	RES-CHIP	10G	5%	1/10W
R050	1-216-073-61	RES-CHIP	10G	5%	1/10W
R052	1-216-053-61	RES-CHIP	1.5K	5%	1/10W
R053	1-216-049-61	RES-CHIP	1K	5%	1/10W
R054	1-216-049-61	RES-CHIP	1K	5%	1/10W
R055	1-216-073-61	RES-CHIP	10G	5%	1/10W
R056	1-216-073-61	RES-CHIP	10G	5%	1/10W
R061	1-216-295-61	SHORT CHIP	0		
R062	1-216-041-61	RES-CHIP	470	5%	1/10W
R063	1-216-041-61	RES-CHIP	470	5%	1/10W
R064	1-216-041-61	RES-CHIP	470	5%	1/10W
R065	1-216-041-61	RES-CHIP	470	5%	1/10W
R066	1-216-049-61	RES-CHIP	1K	5%	1/10W
R067	1-216-049-61	RES-CHIP	1K	5%	1/10W
R101	1-216-025-61	RES-CHIP	100	5%	1/10W
R102	1-216-025-61	RES-CHIP	100	5%	1/10W
R105	1-216-295-61	SHORT CHIP	0		
R109	1-216-041-61	RES-CHIP	470	5%	1/10W
R111	1-216-025-61	RES-CHIP	100	5%	1/10W
R112	1-216-025-61	RES-CHIP	100	5%	1/10W
R113	1-216-025-61	RES-CHIP	100	5%	1/10W
R225	1-216-033-61	RES-CHIP	220	5%	1/10W
R226	1-216-033-61	RES-CHIP	220	5%	1/10W
R227	1-216-033-61	RES-CHIP	220	5%	1/10W
R237	1-216-295-61	SHORT CHIP	0		
R301	1-216-113-00	RES-CHIP	470K	5%	1/10W
R302	1-216-295-61	SHORT CHIP	0		
R303	1-216-049-61	RES-CHIP	1K	5%	1/10W
R304	1-216-073-61	RES-CHIP	10G	5%	1/10W
R306	1-216-085-00	METAL CHIP	33K	5%	1/10W
R308	1-216-025-61	RES-CHIP	100	5%	1/10W
R309	1-216-025-61	RES-CHIP	100	5%	1/10W
R310	1-216-025-61	RES-CHIP	100	5%	1/10W
R315	1-216-053-61	RES-CHIP	1.5K	5%	1/10W
R316	1-216-053-61	RES-CHIP	1.5K	5%	1/10W
R318	1-216-051-61	RES-CHIP	1.2K	5%	1/10W

REF. NO.	PART NO.	DESCRIPTION			REMARK
R319	1-216-025-61	RES-CHIP	100	5%	1/10W
R320	1-216-065-61	RES-CHIP	4.7K	5%	1/10W
R321	1-216-073-61	RES-CHIP	10G	5%	1/10W
R322	1-216-033-61	RES-CHIP	220	5%	1/10W
R326	1-216-029-61	RES-CHIP	150	5%	1/10W
R327	1-216-033-61	RES-CHIP	220	5%	1/10W
R328	1-216-065-61	RES-CHIP	4.7K	5%	1/10W
R329	1-216-041-61	RES-CHIP	470	5%	1/10W
R331	1-216-295-61	SHORT CHIP	0		
R332	1-216-033-61	RES-CHIP	220	5%	1/10W
R333	1-216-083-61	RES-CHIP	27K	5%	1/10W
R334	1-216-129-61	METAL CHIP	2.2M	5%	1/10W
R335	1-216-045-00	METAL CHIP	680	5%	1/10W
R339	1-216-033-61	RES-CHIP	220	5%	1/10W
R340	1-216-025-61	RES-CHIP	100	5%	1/10W
R345	1-216-081-61	RES-CHIP	22K	5%	1/10W
R346	1-216-051-61	RES-CHIP	1.2K	5%	1/10W
R347	1-216-051-61	RES-CHIP	1.2K	5%	1/10W
R348	1-208-806-11	METAL CHIP	10K	0.5%	1/10W
R349	1-216-073-61	RES-CHIP	10G	5%	1/10W
R350	1-216-061-61	RES-CHIP	3.3G	5%	1/10W
R351	1-216-053-61	RES-CHIP	1.5K	5%	1/10W
R354	1-216-057-61	RES-CHIP	2.2K	5%	1/10W
R355	1-216-057-61	RES-CHIP	2.2K	5%	1/10W
R356	1-216-057-61	RES-CHIP	2.2K	5%	1/10W
R357	1-216-079-00	METAL CHIP	18K	5%	1/10W
R358	1-216-049-61	RES-CHIP	1K	5%	1/10W
R359	1-216-033-61	RES-CHIP	220	5%	1/10W
R360	1-216-033-61	RES-CHIP	220	5%	1/10W
R361	1-216-073-61	RES-CHIP	10G	5%	1/10W
R362	1-216-075-61	RES-CHIP	12K	5%	1/10W
R363	1-216-079-00	METAL CHIP	18K	5%	1/10W
R364	1-216-295-61	SHORT CHIP	0		
R365	1-216-033-61	RES-CHIP	220	5%	1/10W
R366	1-216-073-61	RES-CHIP	10G	5%	1/10W
R367	1-216-073-61	RES-CHIP	10G	5%	1/10W
R368	1-216-073-61	RES-CHIP	10G	5%	1/10W
R370	1-216-033-61	RES-CHIP	220	5%	1/10W
R373	1-216-025-61	RES-CHIP	100	5%	1/10W
R376	1-216-081-61	RES-CHIP	22K	5%	1/10W
R377	1-216-121-61	RES-CHIP	1M	5%	1/10W
R378	1-216-295-61	SHORT CHIP	0		
R500	1-220-958-91	RES, METAL FILM	1K		
R501	1-216-049-61	RES-CHIP	1K	5%	1/10W
R505	1-208-830-11	METAL CHIP	100K	0.5%	1/10W
R506	1-216-081-61	RES-CHIP	22K	5%	1/10W
R507	1-249-389-11	CARBON	4.7	5%	1/4W
R508	1-216-471-11	METAL OXIDE	27	5%	3W
R509	1-216-473-11	METAL OXIDE	56	5%	3W
R510	1-216-449-11	METAL OXIDE	56	5%	2W
R511	1-215-908-00	METAL OXIDE	33	5%	3W
R515	1-215-911-11	METAL OXIDE	100	5%	3W
R517	1-208-798-11	METAL CHIP	4.7K	0.5%	1/10W
R518	1-220-948-91	METAL	100	5%	1/2W
R519	1-215-913-11	METAL OXIDE	220	5%	3W
R520	1-215-445-00	METAL	10K	1%	1/4W
R522	1-208-806-11	METAL CHIP	10K	0.5%	1/10W
R523	1-220-952-91	METAL MELF	330	5%	1/2W

http://cxema.ru

The components identified by shading and mark ⚠ are critical for safety. Replace only with part number specified.

A

REF. NO.	PART NO.	DESCRIPTION			REMARK
R525	1-208-846-11	METAL CHIP	470K	0.5%	1/10W
R526	1-208-804-11	METAL CHIP	8.2K	0.5%	1/10W
R527	1-216-001-61	RES-CHIP	10	5%	1/10W
R528	1-208-814-91	METAL CHIP	22K	0.5%	1/10W
R529	1-216-635-11	METAL CHIP	220	0.5%	1/10W
R531	1-220-963-91	METAL MELF	3.3K	5%	1/2W
R533	1-220-958-91	RES, METAL FILM 1K			
R534	1-216-364-11	METAL OXIDE	0.39	5%	2W
R535	1-216-067-00	METAL CHIP	5.6K	5%	1/10W
R536	1-216-067-00	METAL CHIP	5.6K	5%	1/10W
R537	1-208-804-11	METAL CHIP	8.2K	0.5%	1/10W
R539	1-216-049-61	RES-CHIP	1K	5%	1/10W
R540	1-216-065-61	RES-CHIP	4.7K	5%	1/10W
R541	1-216-065-61	RES-CHIP	4.7K	5%	1/10W
R542	1-216-073-61	RES-CHIP	10G	5%	1/10W
R543	1-216-437-00	METAL OXIDE	5.6K	5%	1W
R544	1-215-917-11	METAL OXIDE	1K	5%	3W
R545	1-216-077-61	RES, CHIP 15K		(2012)	
R546	1-216-077-61	RES, CHIP 15K		(2012)	
R547	1-216-085-00	METAL CHIP	33K	5%	1/10W
R548	1-208-796-11	METAL CHIP	3.9K	0.5%	1/10W
R549	1-215-452-00	METAL	20K	1%	1/4W
R550	1-216-097-61	RES-CHIP	100K	5%	1/10W
R551	1-249-441-11	CARBON	100K	5%	1/4W
R552	1-216-057-61	RES-CHIP	2.2K	5%	1/10W
R553	1-215-453-00	METAL	22K	1%	1/4W
R554	1-215-453-00	METAL	22K	1%	1/4W
R556	1-215-437-00	METAL	4.7K	1%	1/4W
R558	1-220-963-91	METAL MELF	3.3K	5%	1/2W
R559	1-220-969-91	METAL CHIP	10K	5%	1/2W
R560	1-216-073-61	RES-CHIP	10G	5%	1/10W
R561	1-216-049-61	RES-CHIP	1K	5%	1/10W
R562	1-249-401-11	CARBON	47	5%	1/4W
R564	1-208-820-11	METAL CHIP	39K	0.5%	1/10W
R565	1-216-073-61	RES-CHIP	10G	5%	1/10W
R567	1-216-105-61	METAL CHIP	220K	5%	1/10W
R568	1-249-383-11	CARBON	1.5	5%	1/4W
R570	1-216-069-61	RES-CHIP	6.8K	5%	1/10W
R571	1-215-443-00	METAL	8.2K	1%	1/4W
R573	1-216-083-61	RES-CHIP	27K	5%	1/10W
R575	1-208-796-11	METAL CHIP	3.9K	0.5%	1/10W
R577	1-215-913-11	METAL OXIDE	220	5%	3W
R578	1-216-369-00	METAL OXIDE	1	5%	2W
R579	1-216-295-61	SHORT CHIP	0		
R580	1-208-830-11	METAL CHIP	100K	0.5%	1/10W
R581	1-208-790-11	METAL CHIP	2.2K	0.5%	1/10W
R582	1-208-846-11	METAL CHIP	470K	0.5%	1/10W
R584	1-208-798-11	METAL CHIP	4.7K	0.5%	1/10W
R587	1-216-295-61	SHORT CHIP	0		
R588	1-215-888-00	METAL OXIDE	220	5%	2W
R589	1-215-888-00	METAL OXIDE	220	5%	2W
R590	1-215-465-00	METAL	68K	1%	1/4W
R591	1-260-288-11	CARBON	0.47	5%	1/2W
R592	1-208-820-11	METAL CHIP	39K	0.5%	1/10W
R593	1-260-288-11	CARBON	0.47	5%	1/2W
R594	1-260-288-11	CARBON	0.47	5%	1/2W
R595	1-216-073-61	RES-CHIP	10G	5%	1/10W

REF. NO.	PART NO.	DESCRIPTION			REMARK
R596	1-215-916-00	METAL OXIDE	680	5%	3W
R597	1-247-750-11	CARBON	680	5%	1/2W
R598	1-220-976-91	METAL MELF	56K	5%	1/2W
R599	1-249-389-11	CARBON	4.7	5%	1/4W
R600	1-220-976-91	METAL MELF	56K	5%	1/2W
R601	1-249-420-11	CARBON	1.8K	5%	1/4W
R602	1-249-389-11	CARBON	4.7	5%	1/4W
R603	1-215-485-00	METAL	470K	1%	1/4W
R604	1-216-097-61	RES-CHIP	100K	5%	1/10W
R607	1-220-965-91	METAL CHIP	4.7K	5%	1/2W
R608	1-240-205-91	CARBON	22M	5%	1/2W
R609	1-216-057-61	RES-CHIP	2.2K	5%	1/10W
R610	1-216-073-61	RES-CHIP	10G	5%	1/10W
R611	1-216-089-61	RES, CHIP 47K		(2012)	
R612	1-216-045-00	METAL CHIP	680	5%	1/10W
R614	1-216-041-61	RES-CHIP	470	5%	1/10W
R615	1-216-369-00	METAL OXIDE	1	5%	2W
R616	1-260-302-51	CARBON	6.8	5%	1/2W
R617	1-247-791-91	CARBON	22	5%	1/4W
R619	1-260-128-11	CARBON	270K	5%	1/2W
R621	1-215-864-00	METAL OXIDE	150	5%	1W
R623	1-216-095-61	RES-CHIP	82K	5%	1/10W
R624	1-216-089-61	RES, CHIP 47K		(2012)	
R626	1-216-049-61	RES-CHIP	1K	5%	1/10W
R627	1-240-251-11	CMT-MELF	6.8	5%	10W
R629	1-247-747-11	CARBON	470	5%	1/2W
R630	1-249-429-11	CARBON	10K	5%	1/4W
R631	1-216-089-61	RES, CHIP 47K		(2012)	
R632	1-220-886-11	FUSIBLE	0.1	10%	1W
R634	⚠ 1-218-265-11	METAL	8.2M	5%	1W
R635	1-216-492-11	METAL OXIDE	82K	5%	3W
R636	1-215-924-00	METAL OXIDE	15K	5%	3W
R637	1-216-492-11	METAL OXIDE	82K	5%	3W
R639	1-216-361-21	METAL OXIDE	0.22	5%	2W
R640	1-220-956-91	METAL MELF	680	5%	1/2W
R641	1-216-361-21	METAL OXIDE	0.22	5%	2W
R642	1-220-959-91	METAL MELF	1.5K	5%	1/2W
R643	1-220-963-91	METAL MELF	3.3K	5%	1/2W
R644	1-220-959-91	METAL MELF	1.5K	5%	1/2W
R646	1-215-924-00	METAL OXIDE	15K	5%	3W
R647	1-249-387-11	CARBON	3.3	5%	1/4W
R648	1-216-057-61	RES-CHIP	2.2K	5%	1/10W
R649	1-220-958-91	RES, METAL FILM 1K			
R650	1-215-882-00	METAL OXIDE	22	5%	2W
R652	1-215-900-11	METAL OXIDE	22K	5%	2W
R653	1-215-873-00	METAL OXIDE	4.7K	5%	1W
R654	1-216-369-00	METAL OXIDE	1	5%	2W
R656	1-220-958-91	RES, METAL FILM 1K			
R657	1-260-127-11	CARBON	220K	5%	1/2W
R659	1-216-049-61	RES-CHIP	1K	5%	1/10W
R660	1-216-073-61	RES-CHIP	10G	5%	1/10W
R661	1-215-873-00	METAL OXIDE	4.7K	5%	1W
R909	1-216-065-61	RES-CHIP	4.7K	5%	1/10W
R910	1-216-065-61	RES-CHIP	4.7K	5%	1/10W

http://cxema.ru

The components identified by shading and mark ⚠ are critical for safety.
Replace only with part number specified.

A B2 B3

REF. NO.	PART NO.	DESCRIPTION	REMARK
		<RELAY>	
RY600 ⚠	1-755-214-11	RELAY, AC POWER	
RY601 ⚠	1-755-214-11	RELAY, AC POWER	
		<SWITCH>	
S501	1-572-707-11	SWITCH, LEVER	
S502	1-572-707-11	SWITCH, LEVER	
		<TRANSFORMER>	
T501	1-437-195-11	TRANSFORMER, HORIZONTAL DRIVE	
T503 ⚠	1-453-305-11	TRANSFORMER ASSY, FLYBACK (NX-4009/C6P4)	
T504	1-431-693-11	TRANSFORMER, HORIZONTAL LINEAR	
T505	1-426-981-11	TRANSFORMER, FERRITE (PMT)	
T601	1-424-505-11	TRANSFORMER, LINE FILTER	
T603 ⚠	1-431-946-11	TRANSFORMER, CONVERTER	
T604 ⚠	1-431-852-11	TRANSFORMER, CONVERTER (SRT)	
		<THERMISTOR>	
THP600	1-809-827-11	THERMISTOR, POSITIVE	
		<TUNER>	
TU101	8-598-452-20	TUNER, FSS BTF-WG442	
		<CRYSTAL>	
X001	1-781-174-21	VIBRATOR, CERAMIC	
X301	1-781-134-21	VIBRATOR, CRYSTAL	
X302	1-781-132-21	VIBRATOR, CRYSTAL	
**********			
*	A-1131-417-A	B2 BOARD MOUNTED **********	
		<CONNECTOR>	
CN2302 *	1-766-952-11	CONNECTOR, BOARD TO BOARD 11P	
**********			
*	A-1136-105-A	B3 BOARD COMPLETE **********	
	4-382-854-11	SCREW (M3X10), P, SW (+)	
		<CAPACITOR>	
C1401	1-104-661-91	ELECT 330UF 20.00% 16V	
C1402	1-104-664-11	ELECT 47UF 20.00% 25V	
C1403	1-104-664-11	ELECT 47UF 20.00% 25V	
C1404	1-164-004-51	CERAMIC CHIP 0.1UF 10.00% 25V	
C1405	1-104-664-11	ELECT 47UF 20.00% 25V	
C1406	1-163-251-11	CERAMIC CHIP 100PF 5.00% 50V	
C1407	1-126-933-11	ELECT 100UF 20.00% 16V	
C1408	1-125-797-91	ELECT 10UF 20.00% 50V	
C1410	1-104-664-11	ELECT 47UF 20.00% 25V	
C1411	1-164-004-51	CERAMIC CHIP 0.1UF 10.00% 25V	
C1412	1-163-038-00	CERAMIC CHIP 0.1UF 25V	
C1413	1-126-935-11	ELECT 470UF 20.00% 16V	
C1414	1-164-346-51	CERAMIC CHIP 1UF 10% 16V	
C1415	1-104-664-11	ELECT 47UF 20.00% 25V	
C1416	1-164-346-51	CERAMIC CHIP 1UF 10% 16V	
C1417	1-126-933-11	ELECT 100UF 20.00% 16V	
C1418	1-163-031-11	CERAMIC CHIP 0.01UF 50V	
C1419	1-163-251-11	CERAMIC CHIP 100PF 5.00% 50V	
C1420	1-163-038-00	CERAMIC CHIP 0.1UF 25V	
C1421	1-164-346-51	CERAMIC CHIP 1UF 10% 16V	
C1422	1-164-346-51	CERAMIC CHIP 1UF 10% 16V	
C1423	1-164-346-51	CERAMIC CHIP 1UF 10% 16V	
C1425	1-164-346-51	CERAMIC CHIP 1UF 10% 16V	
C1426	1-164-346-51	CERAMIC CHIP 1UF 10% 16V	
C1428	1-104-665-11	ELECT 100UF 20.00% 25V	
C1429	1-104-663-11	ELECT 33UF 20.00% 25V	
C1430	1-164-004-51	CERAMIC CHIP 0.1UF 10.00% 25V	
C1431	1-163-038-00	CERAMIC CHIP 0.1UF 25V	
C1432	1-126-933-11	ELECT 100UF 20.00% 16V	
C1433	1-104-664-11	ELECT 47UF 20.00% 16V	
C1434	1-163-133-00	CERAMIC CHIP 470PF 10% 50V	
C1435	1-163-038-00	CERAMIC CHIP 0.1UF 25V	
C1436	1-163-038-00	CERAMIC CHIP 0.1UF 25V	
C1438	1-163-005-51	CERAMIC CHIP 470PF 10% 50V	
C1439	1-163-133-00	CERAMIC CHIP 470PF 10% 50V	
C1440	1-163-133-00	CERAMIC CHIP 470PF 10% 50V	
C1441	1-163-133-00	CERAMIC CHIP 470PF 10% 50V	
C1442	1-163-133-00	CERAMIC CHIP 470PF 10% 50V	
C1443	1-163-133-00	CERAMIC CHIP 470PF 10% 50V	
C1444	1-164-005-51	CERAMIC CHIP 470000PF 10% 25V	
C1445	1-163-133-00	CERAMIC CHIP 470PF 10% 50V	
C1446	1-163-133-00	CERAMIC CHIP 470PF 10% 50V	
C1447	1-125-797-91	ELECT 10UF 20.00% 50V	
C1448	1-164-005-51	CERAMIC CHIP 470000PF 10% 25V	
C1449	1-126-933-11	ELECT 100UF 20.00% 16V	
C1450	1-163-005-51	CERAMIC CHIP 470PF 10% 50V	
C1451	1-163-005-51	CERAMIC CHIP 470PF 10% 50V	
C1452	1-163-005-51	CERAMIC CHIP 470PF 10% 50V	
C1453	1-126-933-11	ELECT 100UF 20.00% 16V	
C1454	1-126-967-11	ELECT 47UF 20.00% 50V	
C1455	1-126-967-11	ELECT 47UF 20.00% 50V	
C1456	1-126-933-11	ELECT 100UF 20.00% 16V	
C1457	1-164-346-51	CERAMIC CHIP 1UF 10% 16V	
C1458	1-126-933-11	ELECT 100UF 20.00% 16V	
C1459	1-163-133-00	CERAMIC CHIP 470PF 10% 50V	
C1460	1-163-133-00	CERAMIC CHIP 470PF 10% 50V	
C1461	1-164-346-51	CERAMIC CHIP 1UF 10% 16V	
C1462	1-164-346-51	CERAMIC CHIP 1UF 10% 16V	
C3201	1-125-797-91	ELECT 10UF 20.00% 50V	
C3203	1-115-339-51	CERAMIC CHIP 0.1UF 10.00% 50V	
C3206	1-164-232-11	CERAMIC CHIP 0.01UF 10.00% 50V	
C3207	1-164-489-51	CERAMIC CHIP 0.22UF 10.00% 16V	
C3208	1-164-489-51	CERAMIC CHIP 0.22UF 10.00% 16V	

http://cxema.ru

B3

REF. NO.	PART NO.	DESCRIPTION		REMARK
C3209	1-163-017-00	CERAMIC CHIP	0.0047UF	10.00% 50V
C3210	1-125-797-91	ELECT	10UF	20.00% 50V
C3211	1-125-797-91	ELECT	10UF	20.00% 50V
C3212	1-125-797-91	ELECT	10UF	20.00% 50V
C3213	1-104-664-11	ELECT	47UF	20.00% 25V
C3214	1-104-664-11	ELECT	47UF	20.00% 25V
C3215	1-117-720-51	CERAMIC CHIP	4.7UF	10V
C3216	1-117-720-51	CERAMIC CHIP	4.7UF	10V
C3217	1-164-232-11	CERAMIC CHIP	0.01UF	10.00% 50V
C3218	1-163-017-00	CERAMIC CHIP	0.0047UF	10.00% 50V
C3219	1-163-017-00	CERAMIC CHIP	0.0047UF	10.00% 50V
C3220	1-163-037-11	CERAMIC CHIP	0.022UF	10.00% 50V
C3221	1-163-037-11	CERAMIC CHIP	0.022UF	10.00% 50V
C3222	1-163-037-11	CERAMIC CHIP	0.022UF	10.00% 50V
C3223	1-163-037-11	CERAMIC CHIP	0.022UF	10.00% 50V
C3224	1-164-505-11	CERAMIC CHIP	2.2UF	16V
C3225	1-163-038-00	CERAMIC CHIP	0.1UF	25V
C3226	1-125-797-91	ELECT	10UF	20.00% 50V
C3227	1-164-505-11	CERAMIC CHIP	2.2UF	16V
C3228	1-107-698-11	ELECT	10UF	20.00% 25V
C3229	1-107-698-11	ELECT	10UF	20.00% 25V
C3240	1-115-339-51	CERAMIC CHIP	0.1UF	10.00% 50V
C3249	1-216-295-61	SHORT CHIP	0	
C3254	1-216-295-61	SHORT CHIP	0	
C3259	1-104-664-11	ELECT	47UF	20.00% 16V
C3260	1-163-251-11	CERAMIC CHIP	100PF	5.00% 50V
C3262	1-104-664-11	ELECT	47UF	20.00% 16V
C3264	1-163-251-11	CERAMIC CHIP	100PF	5.00% 50V
C3265	1-125-797-91	ELECT	10UF	20.00% 50V
C3266	1-125-797-91	ELECT	10UF	20.00% 50V
C3268	1-164-004-51	CERAMIC CHIP	0.1UF	10.00% 25V
C3269	1-164-004-51	CERAMIC CHIP	0.1UF	10.00% 25V
C3270	1-164-690-51	CERAMIC CHIP	0.0022UF	5.00% 50V
C3271	1-164-690-51	CERAMIC CHIP	0.0022UF	5.00% 50V
C3272	1-126-965-11	ELECT	22UF	20.00% 50V
C3273	1-115-339-51	CERAMIC CHIP	0.1UF	10.00% 50V
C3274	1-125-797-91	ELECT	10UF	20.00% 50V
C3276	1-164-344-11	CERAMIC CHIP	0.068UF	10.00% 25V
C3277	1-164-344-11	CERAMIC CHIP	0.068UF	10.00% 25V
C3278	1-164-344-11	CERAMIC CHIP	0.068UF	10.00% 25V
C3279	1-164-344-11	CERAMIC CHIP	0.068UF	10.00% 25V
C3280	1-115-419-11	CERAMIC CHIP	3300PF	5.00% 25V
C3281	1-163-037-11	CERAMIC CHIP	0.022UF	10.00% 50V
C3282	1-125-797-91	ELECT	10UF	20.00% 50V
C3283	1-125-797-91	ELECT	10UF	20.00% 50V
C3284	1-115-339-51	CERAMIC CHIP	0.1UF	10.00% 50V
C3285	1-125-797-91	ELECT	10UF	20.00% 50V
C3286	1-125-797-91	ELECT	10UF	20.00% 50V
C3287	1-125-797-91	ELECT	10UF	20.00% 50V
C3288	1-163-037-11	CERAMIC CHIP	0.022UF	10.00% 50V
C3289	1-115-419-11	CERAMIC CHIP	3300PF	5.00% 25V
C3290	1-164-505-11	CERAMIC CHIP	2.2UF	16V
C3291	1-164-505-11	CERAMIC CHIP	2.2UF	16V
C6200	1-216-295-61	SHORT CHIP	0	
C6201	1-125-797-91	ELECT	10UF	20.00% 50V
C6202	1-126-953-11	ELECT	2200UF	20.00% 35V
C6203	1-164-232-11	CERAMIC CHIP	0.01UF	10.00% 50V
C6204	1-128-550-11	ELECT	2200UF	20.00% 50V
C6205	1-130-495-00	MYLAR	0.1UF	5.00% 50V
C6206	1-128-550-11	ELECT	2200UF	20.00% 50V
C6207	1-115-339-11	CERAMIC CHIP	0.1UF	10.00% 50V
C6208	1-115-339-11	CERAMIC CHIP	0.1UF	10.00% 50V
C6209	1-130-495-00	MYLAR	0.1UF	5.00% 50V
C6210	1-126-924-11	ELECT	330UF	20.00% 10V
C6211	1-126-924-11	ELECT	330UF	20.00% 10V
C6212	1-104-664-11	ELECT	47UF	20.00% 25V
C6213	1-136-161-00	MYLAR	0.047UF	5.00% 50V
C6215	1-126-933-11	ELECT	100UF	20.00% 16V
C6216	1-125-799-91	ELECT	1UF	20.00% 63V
C6217	1-164-004-51	CERAMIC CHIP	0.1UF	10.00% 25V
C6218	1-115-339-11	CERAMIC CHIP	0.1UF	10.00% 50V
C6219	1-125-800-91	ELECT	2.2UF	20.00% 63V
C6220	1-164-505-11	CERAMIC CHIP	2.2UF	16V
C6221	1-125-798-91	ELECT	0.47UF	20.00% 63V
C6222	1-164-505-11	CERAMIC CHIP	2.2UF	16V
C6223	1-125-799-91	ELECT	1UF	20.00% 63V
C6225	1-115-339-11	CERAMIC CHIP	0.1UF	10.00% 50V
C6226	1-115-339-11	CERAMIC CHIP	0.1UF	10.00% 50V
C6227	1-128-550-11	ELECT	2200UF	20.00% 50V
C6228	1-115-339-11	CERAMIC CHIP	0.1UF	10.00% 50V
C6229	1-164-505-51	CERAMIC CHIP	2.2UF	10% 16V
C6230	1-115-339-11	CERAMIC CHIP	0.1UF	10.00% 50V
C6231	1-128-550-11	ELECT	2200UF	20.00% 50V
C6232	1-163-275-11	CERAMIC CHIP	0.001UF	5.00% 50V
C6233	1-163-007-51	CERAMIC CHIP	680PF	10% 50V
C6234	1-163-017-00	CERAMIC CHIP	0.0047UF	10.00% 50V
C6235	1-163-251-11	CERAMIC CHIP	100PF	5.00% 50V
C6236	1-115-339-11	CERAMIC CHIP	0.1UF	10.00% 50V
C6237	1-136-177-00	MYLAR	1UF	5.00% 50V
C6238	1-163-009-11	CERAMIC CHIP	0.001UF	10.00% 50V
C6239	1-127-682-51	ELECT MELF	2200UF	20% 25V
C6240	1-130-495-00	MYLAR	0.1UF	5.00% 50V
C6241	1-136-161-00	MYLAR	0.047UF	5.00% 50V
C6244	1-163-019-51	CERAMIC CHIP	6800PF	10% 50V
C6245	1-163-019-51	CERAMIC CHIP	6800PF	10% 50V
C6249	1-216-295-61	SHORT CHIP	0	
C6251	1-126-965-11	ELECT	22UF	20.00% 50V
C6252	1-126-965-11	ELECT	22UF	20.00% 50V
C6253	1-125-798-91	ELECT	0.47UF	20.00% 63V
		<CONNECTOR>		
CN1400*	1-564-512-11	PLUG, CONNECTOR 9P		
CN1401*	1-508-784-21	PIN, CONNECTOR (5MM PITCH) 1P		
CN1403*	1-564-506-11	PLUG, CONNECTOR 3P		
CN1404*	1-779-891-11	CONNECTOR, BOARD TO BOARD 8P		
CN1405*	1-779-892-11	CONNECTOR, BOARD TO BOARD 10P		
CN1406*	1-779-892-11	CONNECTOR, BOARD TO BOARD 10P		
CN1407*	1-779-891-11	CONNECTOR, BOARD TO BOARD 8P		
CN1408	1-764-818-11	CONNECTOR, BOARD TO BOARD 10P		
CN1409	1-764-818-11	CONNECTOR, BOARD TO BOARD 10P		
CN6200*	1-564-507-11	PLUG, CONNECTOR 4P		

http://cxema.ru

B3

REF. NO.	PART NO.	DESCRIPTION	REMARK
CN6202*	1-564-507-11	PLUG, CONNECTOR 4P	
CN6204*	1-564-509-11	PLUG, CONNECTOR 6P	
CN6205*	1-564-507-11	PLUG, CONNECTOR 4P	
CN6206*	1-564-508-11	PLUG, CONNECTOR 5P	
		<DIODE>	
D1401	8-719-069-60	DIODE UDZS-TE17-9.1B	
D1402	8-719-069-60	DIODE UDZS-TE17-9.1B	
D1403	8-719-069-60	DIODE UDZS-TE17-9.1B	
D1404	8-719-069-60	DIODE UDZS-TE17-9.1B	
D1405	8-719-069-60	DIODE UDZS-TE17-9.1B	
D1406	8-719-069-60	DIODE UDZS-TE17-9.1B	
D1407	8-719-069-60	DIODE UDZS-TE17-9.1B	
D1408	8-719-069-60	DIODE UDZS-TE17-9.1B	
D1409	8-719-069-60	DIODE UDZS-TE17-9.1B	
D1410	8-719-069-60	DIODE UDZS-TE17-9.1B	
D1411	8-719-069-60	DIODE UDZS-TE17-9.1B	
D1412	8-719-069-60	DIODE UDZS-TE17-9.1B	
D1415	8-719-069-60	DIODE UDZS-TE17-9.1B	
D1416	8-719-069-60	DIODE UDZS-TE17-9.1B	
D6200	8-719-109-86	DIODE RD5.1ES-T1B3	
D6205	8-719-988-61	DIODE 1SS355TE-17	
D6211	8-719-073-01	DIODE MA111-(K8).SO	
D6212	8-719-073-01	DIODE MA111-(K8).SO	
		<FERRITE BEAD>	
FB6201	1-410-397-21	FERRITE 1.1UH	
FB6202	1-410-397-21	FERRITE 1.1UH	
		<IC>	
IC1401	8-752-068-46	IC CXA1855S	
IC1402	8-759-100-96	IC NJM4558M-TE2	
IC1403	8-759-231-53	IC L7805CV	
IC1404	8-759-701-59	IC L7809CV	
IC3200	8-759-100-96	IC UPC4558G2-T2	
IC3201	8-759-553-44	IC NJM2187L	
IC3202	8-759-100-96	IC UPC4558G2-T2	
IC3203	8-759-711-10	IC NJU4066BM-T2	
IC3205	8-752-057-18	IC CXA1315P	
IC3206	8-759-496-02	IC NJM2150D	
IC3207	8-759-273-12	IC TDA7315D013TR	
IC6200	8-759-168-24	IC TA8200AH	
IC6201	8-759-553-45	IC TDA7481	
		<JACK>	
J1401	1-784-646-11	TERMINAL, S	
J1402	1-778-387-11	JACK BLOCK, PIN 12P	
		<CHIP CONDUCTOR>	
JR1401	1-216-295-61	SHORT CHIP 0	
JR1402	1-216-295-61	SHORT CHIP 0	
JR1405	1-216-295-61	SHORT CHIP 0	
JR1406	1-216-295-61	SHORT CHIP 0	
JR1407	1-216-295-61	SHORT CHIP 0	

REF. NO.	PART NO.	DESCRIPTION	REMARK
JR1409	1-216-295-61	SHORT CHIP 0	
JR1410	1-216-295-61	SHORT CHIP 0	
JR3200	1-216-295-61	SHORT CHIP 0	
JR3201	1-216-295-61	SHORT CHIP 0	
JR3202	1-216-295-61	SHORT CHIP 0	
JR3203	1-216-295-61	SHORT CHIP 0	
JR3204	1-216-295-61	SHORT CHIP 0	
JR3207	1-216-295-61	SHORT CHIP 0	
JR3208	1-216-295-61	SHORT CHIP 0	
JR3209	1-216-295-61	SHORT CHIP 0	
JR6200	1-216-295-61	SHORT CHIP 0	
JR6201	1-216-295-61	SHORT CHIP 0	
JR6202	1-216-295-61	SHORT CHIP 0	
JR6203	1-216-295-61	SHORT CHIP 0	
JR6204	1-216-295-61	SHORT CHIP 0	
		<COIL>	
L1400	1-414-856-11	INDUCTOR 10UH	
L1402	1-412-537-31	INDUCTOR 100UH	
L1403	1-414-856-11	INDUCTOR 10UH	
L1404	1-412-537-31	INDUCTOR 100UH	
L1405	1-414-856-11	INDUCTOR 10UH	
L1406	1-414-856-11	INDUCTOR 10UH	
L1407	1-414-856-11	INDUCTOR 10UH	
L3202	1-414-856-11	INDUCTOR 10UH	
L6202	1-416-857-11	INDUCTOR 65UH	
		<IC LINK>	
PS6200	1-532-686-21	LINK, IC 2.7A/150V	
PS6201	1-532-686-21	LINK, IC 2.7A/150V	
		<TRANSISTOR>	
Q1401	8-729-230-49	TRANSISTOR 2SC2712-YG-TE85L	
Q1402	8-729-216-22	TRANSISTOR 2SA1162-YG-TE85L	
Q1403	8-729-230-49	TRANSISTOR 2SC2712-YG-TE85L	
Q1404	8-729-230-49	TRANSISTOR 2SC2712-YG-TE85L	
Q1408	8-729-230-49	TRANSISTOR 2SC2712-YG-TE85L	
Q1409	8-729-230-49	TRANSISTOR 2SC2712-YG-TE85L	
Q1410	8-729-230-49	TRANSISTOR 2SC2712-YG-TE85L	
Q6200	8-729-230-49	TRANSISTOR 2SC2712-YG-TE85L	
Q6201	8-729-421-19	TRANSISTOR UN2213-TX	
Q6202	8-729-230-49	TRANSISTOR 2SC2712-YG-TE85L	
Q6203	8-729-421-19	TRANSISTOR UN2213-TX	
Q6204	8-729-421-19	TRANSISTOR UN2213-TX	
Q6205	8-729-230-49	TRANSISTOR 2SC2712-YG-TE85L	
Q6206	8-729-230-49	TRANSISTOR 2SC2712-YG-TE85L	
Q6207	8-729-224-62	TRANSISTOR 2SK246GR-TPE2	
Q6208	8-729-421-19	TRANSISTOR UN2213-TX	
		<RESISTOR>	
R1400	1-216-105-61	METAL CHIP 220K 5% 1/10W	
R1401	1-216-031-61	RES-CHIP 180 5% 1/10W	
R1402	1-216-033-61	RES-CHIP 220 5% 1/10W	
R1403	1-216-033-61	RES-CHIP 220 5% 1/10W	
R1404	1-216-295-61	SHORT CHIP 0	

http://cxema.ru

B3

REF. NO.	PART NO.	DESCRIPTION			REMARK
R1406	1-216-017-61	RES-CHIP	47	5%	1/10W
R1407	1-216-033-61	RES-CHIP	220	5%	1/10W
R1408	1-216-031-61	RES-CHIP	180	5%	1/10W
R1409	1-216-105-61	METAL CHIP	220K	5%	1/10W
R1410	1-216-105-61	METAL CHIP	220K	5%	1/10W
R1411	1-216-089-61	RES, CHIP	47K		(2012)
R1412	1-216-089-61	RES, CHIP	47K		(2012)
R1413	1-216-105-61	METAL CHIP	220K	5%	1/10W
R1414	1-216-025-61	RES-CHIP	100	5%	1/10W
R1417	1-216-025-61	RES-CHIP	100	5%	1/10W
R1418	1-216-025-61	RES-CHIP	100	5%	1/10W
R1419	1-216-025-61	RES-CHIP	100	5%	1/10W
R1420	1-216-073-61	RES-CHIP	10G	5%	1/10W
R1421	1-216-057-61	RES-CHIP	2.2K	5%	1/10W
R1423	1-216-025-61	RES-CHIP	100	5%	1/10W
R1424	1-216-073-61	RES-CHIP	10G	5%	1/10W
R1425	1-216-047-00	METAL CHIP	820	5%	1/10W
R1426	1-216-025-61	RES-CHIP	100	5%	1/10W
R1427	1-216-063-61	RES-CHIP	3.9K	5%	1/10W
R1428	1-216-025-61	RES-CHIP	100	5%	1/10W
R1429	1-216-089-61	RES, CHIP	47K		(2012)
R1430	1-216-025-61	RES-CHIP	100	5%	1/10W
R1431	1-216-025-61	RES-CHIP	100	5%	1/10W
R1432	1-216-041-61	RES-CHIP	470	5%	1/10W
R1433	1-216-025-61	RES-CHIP	100	5%	1/10W
R1434	1-216-025-61	RES-CHIP	100	5%	1/10W
R1435	1-216-022-00	METAL CHIP	75	5%	1/10W
R1436	1-216-025-61	RES-CHIP	100	5%	1/10W
R1437	1-216-022-00	METAL CHIP	75	5%	1/10W
R1438	1-216-025-61	RES-CHIP	100	5%	1/10W
R1439	1-216-295-61	SHORT CHIP	0		
R1441	1-216-025-61	RES-CHIP	100	5%	1/10W
R1442	1-216-049-61	RES-CHIP	1K	5%	1/10W
R1443	1-216-049-61	RES-CHIP	1K	5%	1/10W
R1444	1-216-089-61	RES, CHIP	47K		(2012)
R1445	1-216-025-61	RES-CHIP	100	5%	1/10W
R1446	1-216-105-61	METAL CHIP	220K	5%	1/10W
R1447	1-216-025-61	RES-CHIP	100	5%	1/10W
R1448	1-216-043-61	RES-CHIP	560	5%	1/10W
R1449	1-216-073-61	RES-CHIP	10G	5%	1/10W
R1450	1-216-073-61	RES-CHIP	10G	5%	1/10W
R1451	1-216-073-61	RES-CHIP	10G	5%	1/10W
R1452	1-216-089-61	RES, CHIP	47K		(2012)
R1453	1-216-025-61	RES-CHIP	100	5%	1/10W
R1454	1-216-091-61	RES-CHIP	56K	5%	1/10W
R1455	1-216-073-61	RES-CHIP	10G	5%	1/10W
R1456	1-216-113-61	RES-CHIP	470K	5%	1/10W
R1457	1-216-073-61	RES-CHIP	10G	5%	1/10W
R1458	1-216-073-61	RES-CHIP	10G	5%	1/10W
R1459	1-216-025-61	RES-CHIP	100	5%	1/10W
R1460	1-216-033-61	RES-CHIP	220	5%	1/10W
R1461	1-216-025-61	RES-CHIP	100	5%	1/10W
R1463	1-216-073-61	RES-CHIP	10G	5%	1/10W
R1464	1-216-113-61	RES-CHIP	470K	5%	1/10W
R1465	1-216-113-61	RES-CHIP	470K	5%	1/10W
R1466	1-216-033-61	RES-CHIP	220	5%	1/10W
R1467	1-216-057-61	RES-CHIP	2.2K	5%	1/10W

REF. NO.	PART NO.	DESCRIPTION			REMARK
R1468	1-216-093-11	METAL CHIP	68K	5%	1/10W
R1469	1-216-105-61	METAL CHIP	220K	5%	1/10W
R1470	1-216-105-61	METAL CHIP	220K	5%	1/10W
R1471	1-216-022-00	METAL CHIP	75	5%	1/10W
R1472	1-216-033-61	RES-CHIP	220	5%	1/10W
R1473	1-216-033-61	RES-CHIP	220	5%	1/10W
R1474	1-216-295-61	SHORT CHIP	0		
R1475	1-216-089-61	RES, CHIP	47K		(2012)
R1476	1-216-091-61	RES-CHIP	56K	5%	1/10W
R1477	1-216-047-00	METAL CHIP	820	5%	1/10W
R1478	1-216-051-61	RES-CHIP	1.2K	5%	1/10W
R1479	1-216-105-61	METAL CHIP	220K	5%	1/10W
R1480	1-216-105-61	METAL CHIP	220K	5%	1/10W
R1481	1-216-022-00	METAL CHIP	75	5%	1/10W
R1482	1-216-025-61	RES-CHIP	100	5%	1/10W
R1483	1-216-025-61	RES-CHIP	100	5%	1/10W
R1484	1-216-025-61	RES-CHIP	100	5%	1/10W
R1485	1-216-025-61	RES-CHIP	100	5%	1/10W
R1486	1-216-067-00	METAL CHIP	5.6K	5%	1/10W
R1487	1-216-057-61	RES-CHIP	2.2K	5%	1/10W
R1488	1-216-057-61	RES-CHIP	2.2K	5%	1/10W
R1489	1-216-022-00	METAL CHIP	75	5%	1/10W
R1490	1-216-025-61	RES-CHIP	100	5%	1/10W
R1491	1-216-025-61	RES-CHIP	100	5%	1/10W
R1492	1-216-021-61	RES-CHIP	68	5%	1/10W
R1493	1-216-067-00	METAL CHIP	5.6K	5%	1/10W
R1494	1-216-031-61	RES-CHIP	180	5%	1/10W
R1495	1-216-033-61	RES-CHIP	220	5%	1/10W
R1496	1-216-041-61	RES-CHIP	470	5%	1/10W
R1497	1-216-041-61	RES-CHIP	470	5%	1/10W
R1498	1-216-025-61	RES-CHIP	100	5%	1/10W
R1499	1-216-025-61	RES-CHIP	100	5%	1/10W
R1500	1-216-025-61	RES-CHIP	100	5%	1/10W
R1501	1-216-045-00	METAL CHIP	680	5%	1/10W
R3208	1-216-053-61	RES-CHIP	1.5K	5%	1/10W
R3209	1-216-069-61	RES-CHIP	6.8K	5%	1/10W
R3210	1-216-053-61	RES-CHIP	1.5K	5%	1/10W
R3211	1-216-069-61	RES-CHIP	6.8K	5%	1/10W
R3212	1-216-049-61	RES-CHIP	1K	5%	1/10W
R3213	1-216-091-61	RES-CHIP	56K	5%	1/10W
R3214	1-216-295-61	SHORT CHIP	0		
R3215	1-216-295-61	SHORT CHIP	0		
R3216	1-216-073-61	RES-CHIP	10G	5%	1/10W
R3217	1-216-073-61	RES-CHIP	10G	5%	1/10W
R3218	1-216-065-61	RES-CHIP	4.7K	5%	1/10W
R3219	1-216-077-61	RES, CHIP	15K		(2012)
R3224	1-216-101-61	RES-CHIP	150K	5%	1/10W
R3225	1-216-073-61	RES-CHIP	10G	5%	1/10W
R3226	1-216-073-61	RES-CHIP	10G	5%	1/10W
R3227	1-216-129-61	METAL CHIP	2.2M	5%	1/10W
R3228	1-216-085-00	METAL CHIP	33K	5%	1/10W
R3229	1-216-095-61	RES-CHIP	82K	5%	1/10W
R3230	1-216-055-61	RES-CHIP	1.8K	5%	1/10W
R3231	1-216-091-61	RES-CHIP	56K	5%	1/10W
R3232	1-216-089-61	RES, CHIP	47K		(2012)
R3238	1-216-073-61	RES-CHIP	10G	5%	1/10W
R3239	1-216-073-61	RES-CHIP	10G	5%	1/10W
R3240	1-216-081-61	RES-CHIP	22K	5%	1/10W

http://cxema.ru

B3 C

REF. NO.	PART NO.	DESCRIPTION			REMARK
R3241	1-216-093-11	METAL CHIP	68K	5%	1/10W
R3242	1-216-081-61	RES-CHIP	22K	5%	1/10W
R3243	1-216-073-61	RES-CHIP	10G	5%	1/10W
R3244	1-216-073-61	RES-CHIP	10G	5%	1/10W
R3247	1-216-101-61	RES-CHIP	150K	5%	1/10W
R3248	1-216-081-61	RES-CHIP	22K	5%	1/10W
R3249	1-216-073-61	RES-CHIP	10G	5%	1/10W
R3250	1-216-049-61	RES-CHIP	1K	5%	1/10W
R3260	1-216-025-61	RES-CHIP	100	5%	1/10W
R3261	1-216-025-61	RES-CHIP	100	5%	1/10W
R3262	1-216-101-61	RES-CHIP	150K	5%	1/10W
R3263	1-216-093-11	METAL CHIP	68K	5%	1/10W
R3264	1-216-053-61	RES-CHIP	1.5K	5%	1/10W
R3266	1-216-295-61	SHORT CHIP	0		
R3267	1-216-049-61	RES-CHIP	1K	5%	1/10W
R3268	1-216-049-61	RES-CHIP	1K	5%	1/10W
R3269	1-216-057-61	RES-CHIP	2.2K	5%	1/10W
R3270	1-216-295-61	SHORT CHIP	0		
R3271	1-216-069-61	RES-CHIP	6.8K	5%	1/10W
R3272	1-216-069-61	RES-CHIP	6.8K	5%	1/10W
R3273	1-216-057-61	RES-CHIP	2.2K	5%	1/10W
R3274	1-216-069-61	RES-CHIP	6.8K	5%	1/10W
R3275	1-216-295-61	SHORT CHIP	0		
R3276	1-216-295-61	SHORT CHIP	0		
R3277	1-216-073-61	RES-CHIP	10G	5%	1/10W
R3278	1-216-067-00	METAL CHIP	5.6K	5%	1/10W
R3279	1-216-067-00	METAL CHIP	5.6K	5%	1/10W
R3280	1-216-033-61	RES-CHIP	220	5%	1/10W
R3281	1-216-033-61	RES-CHIP	220	5%	1/10W
R3282	1-216-079-00	METAL CHIP	18K	5%	1/10W
R3283	1-216-081-61	RES-CHIP	22K	5%	1/10W
R3284	1-216-073-61	RES-CHIP	10G	5%	1/10W
R3285	1-216-073-61	RES-CHIP	10G	5%	1/10W
R3286	1-216-073-61	RES-CHIP	10G	5%	1/10W
R3287	1-216-073-61	RES-CHIP	10G	5%	1/10W
R3288	1-216-073-61	RES-CHIP	10G	5%	1/10W
R3289	1-216-073-61	RES-CHIP	10G	5%	1/10W
R3290	1-216-081-61	RES-CHIP	22K	5%	1/10W
R3291	1-216-079-00	METAL CHIP	18K	5%	1/10W
R3294	1-216-073-61	RES-CHIP	10G	5%	1/10W
R3295	1-216-065-61	RES-CHIP	4.7K	5%	1/10W
R3296	1-216-065-61	RES-CHIP	4.7K	5%	1/10W
R3297	1-216-069-61	RES-CHIP	6.8K	5%	1/10W
R3298	1-216-069-61	RES-CHIP	6.8K	5%	1/10W
R3299	1-216-069-61	RES-CHIP	6.8K	5%	1/10W
R6200	1-216-089-61	RES, CHIP	47K		(2012)
R6201	1-216-065-61	RES-CHIP	4.7K	5%	1/10W
R6202	1-216-065-61	RES-CHIP	4.7K	5%	1/10W
R6203	1-216-295-61	SHORT CHIP	0		
R6205	1-216-073-61	RES-CHIP	10G	5%	1/10W
R6207	1-216-049-61	RES-CHIP	1K	5%	1/10W
R6209	1-216-049-61	RES-CHIP	1K	5%	1/10W
R6213	1-216-073-61	RES-CHIP	10G	5%	1/10W
R6214	1-216-073-61	RES-CHIP	10G	5%	1/10W
R6219	1-216-089-61	RES, CHIP	47K		(2012)
R6235	1-216-029-61	RES-CHIP	150	5%	1/10W
R6236	1-216-075-61	RES-CHIP	12K	5%	1/10W
R6237	1-216-089-61	RES, CHIP	47K		(2012)

REF. NO.	PART NO.	DESCRIPTION			REMARK
R6239	1-216-053-61	RES-CHIP	1.5K	5%	1/10W
R6240	1-220-969-91	METAL CHIP	10K	5%	1/2W
R6241	1-215-890-11	METAL OXIDE	470	5%	2W
R6242	1-215-890-11	METAL OXIDE	470	5%	2W
R6243	1-249-392-11	CARBON	8.2	5%	1/4W
R6244	1-216-073-61	RES-CHIP	10G	5%	1/10W
R6245	1-216-053-61	RES-CHIP	1.5K	5%	1/10W
R6246	1-216-053-61	RES-CHIP	1.5K	5%	1/10W
R6248	1-216-041-61	RES-CHIP	470	5%	1/10W
R6249	1-216-057-61	RES-CHIP	2.2K	5%	1/10W
R6250	1-216-295-61	SHORT CHIP	0		
R6251	1-216-049-61	RES-CHIP	1K	5%	1/10W
R6252	1-216-097-61	RES-CHIP	100K	5%	1/10W
R6253	1-216-041-61	RES-CHIP	470	5%	1/10W
R6254	1-216-017-61	RES-CHIP	47	5%	1/10W
R6255	1-216-308-61	METAL CHIP	4.7	5%	1/10W
R6256	1-216-065-61	RES-CHIP	4.7K	5%	1/10W
R6257	1-216-061-61	RES-CHIP	3.3G	5%	1/10W
R6258	1-216-017-61	RES-CHIP	47	5%	1/10W
R6259	1-216-308-61	METAL CHIP	4.7	5%	1/10W
R6260	1-216-073-61	RES-CHIP	10G	5%	1/10W
R6262	1-216-059-61	RES-CHIP	2.7K	5%	1/10W
R6263	1-216-059-61	RES-CHIP	2.7K	5%	1/10W
R6266	1-216-089-61	RES, CHIP	47K		(2012)
R6268	1-216-065-61	RES-CHIP	4.7K	5%	1/10W
R6278	1-216-295-61	SHORT CHIP	0		
		<TUNER>			
TU1401	8-598-508-10	TUNER, FSS BTF-LG436			

****

*	A-1331-906-A	C BOARD MOUNTED **********			
	4-382-854-11	SCREW (M3X10), P, SW (+)			
		<CAPACITOR>			
C700	1-110-389-11	FILM MELF	0.1UF	5%	250V
C701	1-162-114-00	CERAMIC	0.0047UF		2KV
C702	1-102-074-00	CERAMIC	0.001UF	10.00%	50V
C707	1-137-399-11	MYLAR	0.1UF	5.00%	50V
C708	1-102-228-00	CERAMIC	470PF	10.00%	500V
C709	1-102-228-00	CERAMIC	470PF	10.00%	500V
C710	1-102-960-00	CERAMIC	24PF	5.00%	50V
C711	1-102-852-91	CERAMIC	47PF	5.00%	50V
C712	1-102-525-11	CERAMIC	68PF	5.00%	50V
C713	1-102-228-00	CERAMIC	470PF	10.00%	500V
C716	1-104-665-11	ELECT	100UF	20.00%	25V
C717	1-107-651-11	ELECT	4.7UF	20.00%	250V
C726	1-104-664-11	ELECT	47UF	20.00%	25V
C1800	1-125-797-91	ELECT	10UF	20.00%	50V
C1803	1-125-797-91	ELECT	10UF	20.00%	50V
C1804	1-125-797-91	ELECT	10UF	20.00%	50V
C1809	1-126-942-61	ELECT	1000UF	20.00%	25V

http://cxema.ru

The components identified by shading and mark ⚠ are critical for safety. Replace only with part number specified.

C D1

REF. NO.	PART NO.	DESCRIPTION			REMARK
		<CONNECTOR>			
CN700	1-695-915-11	TAB (CONTACT)			
CN701	1-508-765-00	PIN, CONNECTOR (5MM PITCH) 3P			
CN702	1-695-915-11	TAB (CONTACT)			
CN703 *	1-564-509-11	PLUG, CONNECTOR 6P			
CN704	1-695-915-11	TAB (CONTACT)			
CN706	1-695-915-11	TAB (CONTACT)			
CN1801*	1-564-509-11	PLUG, CONNECTOR 6P			
CN1802*	1-564-506-11	PLUG, CONNECTOR 3P			
		<DIODE>			
D702	8-719-911-19	DIODE 1SS119-25TD			
D703	8-719-911-19	DIODE 1SS119-25TD			
D704	8-719-911-19	DIODE 1SS119-25TD			
D705	8-719-051-85	DIODE HSS83TD			
D706	8-719-051-85	DIODE HSS83TD			
D707	8-719-051-85	DIODE HSS83TD			
D708	8-719-911-19	DIODE 1SS119-25TD			
D709	8-719-911-19	DIODE 1SS119-25TD			
D710	8-719-911-19	DIODE 1SS119-25TD			
D711	8-719-110-23	DIODE RD11ES-T1B3			
D720	8-719-911-19	DIODE 1SS119-25TD			
D721	8-719-911-19	DIODE 1SS119-25TD			
D722	8-719-911-19	DIODE 1SS119-25TD			
D1803	8-719-911-19	DIODE 1SS119-25TD			
D1804	8-719-911-19	DIODE 1SS119-25TD			
D1808	8-719-908-03	DIODE GP08DPKG23			
		<IC>			
IC701	8-759-561-28	IC STV5112			
IC1800	8-759-822-38	IC LA6510			
		<JACK>			
J701 ⚠	1-540-071-22	SOCKET, CRT			
		<COIL>			
L701	1-410-667-31	INDUCTOR	22UH		
L705	1-414-186-31	INDUCTOR	33UH		
L706	1-414-186-31	INDUCTOR	33UH		
L707	1-414-186-31	INDUCTOR	33UH		
		<TRANSISTOR>			
Q1800	8-729-119-76	TRANSISTOR 2SA1175TP-HFE			
Q1802	8-729-119-78	TRANSISTOR 2SC2785TP-HFE			
		<RESISTOR>			
R700	1-249-393-11	CARBON	10	5%	1/4W
R701	1-249-496-11	CARBON	100K	5%	1/2W
R702	1-215-469-00	METAL	100K	1%	1/4W
R703	1-215-414-00	METAL	510	1%	1/4W
R704	1-215-414-00	METAL	510	1%	1/4W
R705	1-240-297-91	METAL MELF	1.2K	5%	1/2W
R706	1-240-297-91	METAL MELF	1.2K	5%	1/2W
R707	1-215-414-00	METAL	510	1%	1/4W
R708	1-240-297-91	METAL MELF	1.2K	5%	1/2W
R709	1-215-903-11	METAL OXIDE	68K	5%	2W
R711	1-215-903-11	METAL OXIDE	68K	5%	2W
R712	1-215-903-11	METAL OXIDE	68K	5%	2W
R713	1-215-467-00	METAL	82K	1%	1/4W
R714	1-220-965-91	METAL CHIP	4.7K	5%	1/2W
R715	1-220-954-91	METAL MELF	470	5%	1/2W
R716	1-220-954-91	METAL MELF	470	5%	1/2W
R717	1-220-965-91	METAL CHIP	4.7K	5%	1/2W
R718	1-247-752-11	CARBON	1K	5%	1/2W
R719	1-220-965-91	METAL CHIP	4.7K	5%	1/2W
R722	1-247-752-11	CARBON	1K	5%	1/2W
R723	1-220-954-91	METAL MELF	470	5%	1/2W
R724	1-247-752-11	CARBON	1K	5%	1/2W
R730	1-216-392-11	METAL OXIDE	1.8	5%	3W
R734	1-247-739-11	CARBON	100	5%	1/2W
R744	1-215-415-00	METAL	560	1%	1/4W
R745	1-215-410-00	METAL	360	1%	1/4W
R1800	1-220-958-91	RES, METAL FILM 1K			
R1801	1-220-966-91	METAL CHIP	5.6K	5%	1/2W
R1802	1-249-387-11	CARBON	3.3	5%	1/4W
R1803	1-249-387-11	CARBON	3.3	5%	1/4W
R1805	1-220-969-91	METAL CHIP	10K	5%	1/2W
R1806	1-220-965-91	METAL CHIP	4.7K	5%	1/2W
R1808	1-220-965-91	METAL CHIP	4.7K	5%	1/2W
R1809	1-220-974-91	METAL CHIP	33K	5%	1/2W
R1810	1-220-974-91	METAL CHIP	33K	5%	1/2W
R1811	1-220-974-91	METAL CHIP	33K	5%	1/2W
R1812	1-220-974-91	METAL CHIP	33K	5%	1/2W
R1821	1-220-974-91	METAL CHIP	33K	5%	1/2W
R1822	1-220-974-91	METAL CHIP	33K	5%	1/2W
R1823	1-220-966-91	METAL CHIP	5.6K	5%	1/2W
R1824	1-220-974-91	METAL CHIP	33K	5%	1/2W
R1825	1-220-963-91	METAL MELF	3.3K	5%	1/2W
		<VARIABLE RESISTOR>			
RV702	1-241-656-11	RES, ADJ, METAL FILM 110M			
RV1801	1-223-241-11	RES, ADJ, CARBON 47K			
		<SPARK GAP>			
SG701	1-519-422-11	GAP, SPARK			

****

* A-1343-640-A D1 BOARD MOUNTED
****

		<CAPACITOR>			
C2801	1-130-479-00	MYLAR	0.0047UF	5.00%	50V
C2803	1-136-357-11	MYLAR	680PF	5.00%	50V

http://cxema.ru

D1

REF. NO.	PART NO.	DESCRIPTION			REMARK
C2805	1-104-664-11	ELECT	47UF	20.00%	25V
C2806	1-136-559-11	MYLAR	0.0047UF	10.00%	400V
C2809	1-125-797-91	ELECT	10UF	20.00%	50V
C2810	1-162-318-11	CERAMIC	0.001UF	10.00%	500V
C2811	1-107-938-11	ELECT	0.47UF	20.00%	160V
C2813	1-107-636-11	ELECT	10UF	20.00%	160V
C2814	1-125-797-91	ELECT	10UF	20.00%	50V
C2817	1-102-244-00	CERAMIC	220PF	10.00%	500V
C2818	1-136-347-11	FILM	0.0047UF	5.00%	630V
C2819	1-104-664-11	ELECT	47UF	20.00%	25V
C2820	1-107-714-11	ELECT	10UF	20.00%	16V
C2822	1-106-375-12	MYLAR	0.022UF	10.00%	250V
C2824	1-104-664-11	ELECT	47UF	20.00%	25V
C2825	1-136-759-11	FILM	0.039UF	5.00%	200V
C2826	1-137-194-81	MYLAR	0.47UF	5.00%	50V
C2828	1-107-714-11	ELECT	10UF	20.00%	16V
C2829	1-164-161-11	CERAMIC CHIP	0.0022UF	10.00%	50V
C2830	1-130-479-00	MYLAR	0.0047UF	5.00%	50V
C2831	1-107-714-11	ELECT	10UF	20.00%	16V
C2832	1-125-799-91	ELECT	1UF	20.00%	63V
C2833	1-137-366-11	MYLAR	0.0022UF	5.00%	50V
C2834	1-106-375-12	MYLAR	0.022UF	10.00%	250V
C2835	1-216-295-61	SHORT CHIP	0		
C2837	1-102-129-00	CERAMIC	0.01UF	10.00%	50V
C2840	1-106-383-00	MYLAR	0.047UF	5.00%	100V
C2841	1-137-194-81	MYLAR	0.47UF	5.00%	50V
		<CONNECTOR>			
CN2821*	1-564-506-11	PLUG, CONNECTOR 3P			
CN2822*	1-564-510-11	PLUG, CONNECTOR 7P			
CN2823	1-695-915-11	TAB (CONTACT)			
		<DIODE>			
D2801	8-719-988-61	DIODE 1SS355TE-17			
D2803	8-719-063-73	DIODE D1NL20U-TR			
D2804	8-719-063-73	DIODE D1NL20U-TR			
D2806	8-719-302-43	DIODE EL1Z			
D2811	8-719-988-61	DIODE 1SS355TE-17			
D2813	8-719-988-61	DIODE 1SS355TE-17			
		<IC>			
IC2801	8-759-700-07	IC NJM2903M-TE2			
IC2803	8-759-701-59	IC NJM78M09FA			
IC2805	8-759-998-98	IC LM358DR			
		<CHIP CONDUCTOR>			
JR2803	1-216-295-61	SHORT CHIP	0		
JR2804	1-216-295-61	SHORT CHIP	0		
JR2815	1-216-295-61	SHORT CHIP	0		
		<COIL>			
L2801	1-406-677-11	INDUCTOR	10MH		
L2802	1-406-989-21	INDUCTOR	10MH		

REF. NO.	PART NO.	DESCRIPTION			REMARK
L2803	1-414-502-41	INDUCTOR	33MH		
L2806	1-406-678-11	INDUCTOR	15MH		
		<TRANSISTOR>			
Q2802	8-729-026-49	TRANSISTOR 2SA1037AK-T146-QR			
Q2805	8-729-026-49	TRANSISTOR 2SA1037AK-T146-QR			
Q2806	8-729-120-28	TRANSISTOR 2SC1623-L5L6			
Q2807	8-729-043-95	TRANSISTOR 2SC3840K			
Q2811	8-729-931-45	TRANSISTOR IRF614-LF			
Q2813	8-729-120-28	TRANSISTOR 2SC1623-L5L6			
Q2821	8-729-120-28	TRANSISTOR 2SC1623-L5L6			
Q2822	8-729-026-49	TRANSISTOR 2SA1037AK-T146-QR			
Q2823	8-729-017-06	TRANSISTOR 2SC4793			
		<RESISTOR>			
R2801	1-216-081-61	RES-CHIP	22K	5%	1/10W
R2803	1-216-057-61	RES-CHIP	2.2K	5%	1/10W
R2804	1-216-041-61	RES-CHIP	470	5%	1/10W
R2806	1-216-073-61	RES-CHIP	10G	5%	1/10W
R2809	1-216-073-61	RES-CHIP	10G	5%	1/10W
R2812	1-216-097-61	RES-CHIP	100K	5%	1/10W
R2813	1-216-089-61	RES, CHIP	47K		(2012)
R2816	1-216-097-61	RES-CHIP	100K	5%	1/10W
R2820	1-216-089-61	RES, CHIP	47K		(2012)
R2821	1-249-412-11	CARBON	390	5%	1/4W
R2824	1-249-393-11	CARBON	10	5%	1/4W
R2825	1-216-037-61	RES-CHIP	330	5%	1/10W
R2827	1-216-041-61	RES-CHIP	470	5%	1/10W
R2830	1-215-876-00	METAL OXIDE	15K	5%	1W
R2831	1-216-462-00	METAL OXIDE	8.2K	5%	2W
R2833	1-215-893-11	METAL OXIDE	1.5K	5%	2W
R2834	1-216-462-00	METAL OXIDE	8.2K	5%	2W
R2837	1-216-041-61	RES-CHIP	470	5%	1/10W
R2838	1-216-069-61	RES-CHIP	6.8K	5%	1/10W
R2839	1-216-081-61	RES-CHIP	22K	5%	1/10W
R2840	1-216-097-61	RES-CHIP	100K	5%	1/10W
R2843	1-216-097-61	RES-CHIP	100K	5%	1/10W
R2844	1-216-097-61	RES-CHIP	100K	5%	1/10W
R2846	1-216-059-61	RES-CHIP	2.7K	5%	1/10W
R2847	1-216-049-61	RES-CHIP	1K	5%	1/10W
R2850	1-215-914-11	METAL OXIDE	330	5%	3W
R2853	1-215-914-11	METAL OXIDE	330	5%	3W
R2857	1-216-085-00	METAL CHIP	33K	5%	1/10W
R2858	1-216-051-61	RES-CHIP	1.2K	5%	1/10W
R2859	1-216-057-61	RES-CHIP	2.2K	5%	1/10W
R2860	1-216-059-61	RES-CHIP	2.7K	5%	1/10W
R2861	1-216-107-00	METAL CHIP	270K	5%	1/10W
R2862	1-216-107-00	METAL CHIP	270K	5%	1/10W
R2866	1-216-073-61	RES-CHIP	10G	5%	1/10W
R2867	1-216-081-61	RES-CHIP	22K	5%	1/10W
R2869	1-216-121-61	RES-CHIP	1M	5%	1/10W
R2871	1-216-057-61	RES-CHIP	2.2K	5%	1/10W
R2872	1-216-057-61	RES-CHIP	2.2K	5%	1/10W
R2874	1-216-085-00	METAL CHIP	33K	5%	1/10W
R2877	1-215-905-11	METAL OXIDE	10	5%	3W

http://cxema.ru

The components identified by shading and mark ⚠ are critical for safety. Replace only with part number specified.

D1 **F** **H3**

REF. NO.	PART NO.	DESCRIPTION			REMARK
		<TRANSFORMER>			
T2801	1-424-584-11	TRANSFORMER, DYNAMIC FOCUS			

****

*	A-1241-361-A	F BOARD MOUNTED **********			
	1-533-223-11	HOLDER, FUSE			
		<CAPACITOR>			
C654 ⚠	1-117-703-11	CERAMIC	0.0047UF	99%	250V
C4601 ⚠	1-104-708-11	MYLAR	0.47UF	20.00%	250V
C4602 ⚠	1-109-835-11	MYLAR	0.68UF	20.00%	250V
		<CONNECTOR>			
CN4601*⚠	1-580-843-11	PIN, CONNECTOR (POWER)			
CN4602*⚠	1-580-843-11	PIN, CONNECTOR (POWER)			
CN4603	1-695-915-11	TAB (CONTACT)			
		<FUSE>			
F4601 ⚠	1-532-299-00	FUSE, TIME-LAG 5A/250V			
		<RESISTOR>			
R4601 ⚠	1-202-719-00	SOLID	1M	10%	1/2W
		<TRANSFORMER>			
T4601 ⚠	1-431-536-11	TRANSFORMER, LINE FILTER			
T4602 ⚠	1-431-182-11	TRANSFORMER, LINE FILTER			
		<VARISTOR>			
VDR461	1-803-830-11	VARISTOR (ERZV14D621)			

****

*	A-1372-772-A	H3 BOARD MOUNTED **********			
*	4-055-304-01	HOLDER, LED			
		<CAPACITOR>			
C3900	1-136-153-00	MYLAR	0.01UF	5.00%	50V
C3902	1-136-153-00	MYLAR	0.01UF	5.00%	50V
C3904	1-104-664-11	ELECT	47UF	20.00%	25V
C3905	1-125-805-91	ELECT	4.7UF	20.00%	50V
C3906	1-125-805-91	ELECT	4.7UF	20.00%	50V
C3907	1-136-175-00	MYLAR	0.68UF	5.00%	50V
C3910	1-104-664-11	ELECT	47UF	20.00%	16V
C3911	1-104-664-11	ELECT	47UF	20.00%	16V
C3912	1-102-114-00	CERAMIC	470PF	10.00%	50V
C3913	1-125-799-91	ELECT	1UF	20.00%	63V
C3914	1-126-933-11	ELECT	100UF	20.00%	16V
		<CONNECTOR>			
CN3601*	1-580-844-11	PIN, CONNECTOR (POWER)			
CN3602*	1-580-844-11	PIN, CONNECTOR (POWER)			
CN3603	1-695-915-11	TAB (CONTACT)			
CN3901*	1-564-507-11	PLUG, CONNECTOR 4P			
CN3902*	1-564-509-11	PLUG, CONNECTOR 6P			
CN3903*	1-564-507-11	PLUG, CONNECTOR 4P			
CN3904*	1-564-512-11	PLUG, CONNECTOR 9P			
CN3905*	1-564-512-11	PLUG, CONNECTOR 9P			
CN3906*	1-564-506-11	PLUG, CONNECTOR 3P			
		<DIODE>			
D3900	8-719-070-16	DIODE NNCD9.1A-T1			
D3901	8-719-070-16	DIODE NNCD9.1A-T1			
D3902	8-719-070-16	DIODE NNCD9.1A-T1			
D3905	8-719-070-16	DIODE NNCD9.1A-T1			
D3906	8-719-045-19	DIODE SPB-26MVWF			
D3907	8-719-070-16	DIODE NNCD9.1A-T1			
D3908	8-719-070-16	DIODE NNCD9.1A-T1			
		<IC>			
IC3901	8-742-134-00	HYB IC SBX1981-51P			
		<JACK>			
J3901	1-750-264-11	JACK			
J3902	1-784-646-11	TERMINAL, S			
J3903	1-770-329-11	JACK, PIN 3P			
		<COIL>			
L3901	1-414-183-41	INDUCTOR	10UH		
L3902	1-414-183-41	INDUCTOR	10UH		
L3903	1-406-976-11	INDUCTOR	68UH		
		<TRANSISTOR>			
Q3901	8-729-030-02	TRANSISTOR DTC144ESA-TP			
Q3902	8-729-030-02	TRANSISTOR DTC144ESA-TP			
		<RESISTOR>			
R3900	1-220-952-91	METAL MELF	330	5%	1/2W
R3901	1-220-952-91	METAL MELF	330	5%	1/2W
R3902	1-247-804-11	CARBON	75	5%	1/4W
R3904	1-220-969-91	METAL CHIP	10K	5%	1/2W
R3905	1-220-969-91	METAL CHIP	10K	5%	1/2W
R3907	1-220-966-91	METAL CHIP	5.6K	5%	1/2W
R3908	1-220-954-91	METAL MELF	470	5%	1/2W
R3909	1-220-958-91	RES, METAL FILM 1K			

http://cxema.ru

The components identified by shading and mark ⚠ are critical for safety.
Replace only with part number specified.

H3 J2 P1

REF. NO.	PART NO.	DESCRIPTION			REMARK
R3910	1-220-960-91	METAL MELF	1.8K	5%	1/2W
R3911	1-220-952-91	METAL MELF	330	5%	1/2W
R3912	1-220-963-91	METAL MELF	3.3K	5%	1/2W
R3913	1-220-969-91	METAL CHIP	10K	5%	1/2W
R3914	1-220-952-91	METAL MELF	330	5%	1/2W
R3915	1-220-969-91	METAL CHIP	10K	5%	1/2W
R3916	1-249-401-11	CARBON	47	5%	1/4W
R3917	1-247-804-11	CARBON	75	5%	1/4W
R3918	1-220-951-91	METAL	220	5%	1/2W
R3919	1-220-951-91	METAL	220	5%	1/2W
R3920	1-220-948-91	METAL	100	5%	1/2W
R3921	1-220-948-91	METAL	100	5%	1/2W
R3922	1-220-961-91	METAL CHIP	2.2K	5%	1/2W
R3923	1-220-951-91	METAL	220	5%	1/2W
R3924	1-247-804-11	CARBON	75	5%	1/4W
		<SWITCH>			
S3601 ⚠	1-571-433-21	SWITCH, PUSH (AC POWER)			
S3902	1-692-431-21	SWITCH, TACTILE			
S3903	1-692-431-21	SWITCH, TACTILE			
S3904	1-692-431-21	SWITCH, TACTILE			
S3905	1-692-431-21	SWITCH, TACTILE			
S3906	1-692-431-21	SWITCH, TACTILE			
S3907	1-692-431-21	SWITCH, TACTILE			
S3908	1-692-431-21	SWITCH, TACTILE			
**********					
*	A-1388-243-A	J2 BOARD MOUNTED			
		**********			
		<CONNECTOR>			
CN3451 *	1-564-518-11	PLUG, CONNECTOR 3P			
		<DIODE>			
D3453	8-719-110-72	DIODE RD30ES-T1B2			
D3454	8-719-110-72	DIODE RD30ES-T1B2			
		<JACK>			
J3451	1-694-467-11	TERMINAL, PUSH (2P)			
**********					
*	A-1190-365-A	P1 BOARD MOUNTED			
		**********			
		<CAPACITOR>			
C4300	1-164-346-51	CERAMIC CHIP	1UF	10%	16V
C4301	1-163-038-00	CERAMIC CHIP	0.1UF		25V
C4302	1-163-031-11	CERAMIC CHIP	0.01UF		50V

REF. NO.	PART NO.	DESCRIPTION			REMARK
C4303	1-125-799-91	ELECT	1UF	20.00%	63V
C4304	1-163-038-00	CERAMIC CHIP	0.1UF		25V
C4305	1-163-038-00	CERAMIC CHIP	0.1UF		25V
C4307	1-164-346-51	CERAMIC CHIP	1UF	10%	16V
C4310	1-104-664-11	ELECT	47UF	20.00%	16V
C4312	1-104-664-11	ELECT	47UF	20.00%	16V
C4313	1-163-038-00	CERAMIC CHIP	0.1UF		25V
C4314	1-125-797-91	ELECT	10UF	20.00%	50V
C4315	1-104-666-11	ELECT	220UF	20.00%	25V
C4317	1-126-967-11	ELECT	47UF	20.00%	50V
C4318	1-163-038-00	CERAMIC CHIP	0.1UF		25V
C4319	1-163-233-51	CERAMIC CHIP	18PF	5.00%	50V
C4320	1-163-233-51	CERAMIC CHIP	18PF	5.00%	50V
C4321	1-163-038-00	CERAMIC CHIP	0.1UF		25V
C4322	1-126-957-11	ELECT	0.22UF	20.00%	50V
C4323	1-163-125-00	CERAMIC CHIP	220PF	5.00%	50V
C4324	1-125-805-91	ELECT	4.7UF	20.00%	50V
C4325	1-126-967-11	ELECT	47UF	20.00%	50V
C4326	1-163-038-00	CERAMIC CHIP	0.1UF		25V
C4327	1-164-005-51	CERAMIC CHIP	470000PF	10%	25V
C4329	1-163-038-00	CERAMIC CHIP	0.1UF		25V
C4330	1-125-805-91	ELECT	4.7UF	20.00%	50V
C4331	1-125-797-91	ELECT	10UF	20.00%	50V
C4332	1-164-004-51	CERAMIC CHIP	0.1UF	10.00%	25V
C4333	1-163-038-00	CERAMIC CHIP	0.1UF		25V
C4334	1-125-799-91	ELECT	1UF	20.00%	63V
C4335	1-163-017-00	CERAMIC CHIP	0.0047UF	10.00%	50V
C4336	1-164-004-51	CERAMIC CHIP	0.1UF	10.00%	25V
C4337	1-164-346-51	CERAMIC CHIP	1UF	10%	16V
C4338	1-164-346-51	CERAMIC CHIP	1UF	10%	16V
C4339	1-164-346-51	CERAMIC CHIP	1UF	10%	16V
C4340	1-163-038-00	CERAMIC CHIP	0.1UF		25V
C4341	1-104-665-11	ELECT	100UF	20.00%	10V
C4347	1-104-665-11	ELECT	100UF	20.00%	10V
C4348	1-163-038-00	CERAMIC CHIP	0.1UF		25V
C4349	1-163-251-11	CERAMIC CHIP	100PF	5.00%	50V
C4350	1-125-797-91	ELECT	10UF	20.00%	50V
C4352	1-163-251-11	CERAMIC CHIP	100PF	5.00%	50V
C4353	1-104-665-11	ELECT	100UF	20.00%	10V
C4355	1-163-038-00	CERAMIC CHIP	0.1UF		25V
C4356	1-164-346-51	CERAMIC CHIP	1UF	10%	16V
C4357	1-163-038-00	CERAMIC CHIP	0.1UF		25V
C4359	1-163-038-00	CERAMIC CHIP	0.1UF		25V
C4362	1-163-235-11	CERAMIC CHIP	22PF	5.00%	50V
C4363	1-163-237-51	CERAMIC CHIP	27PF	10%	50V
C4364	1-104-665-11	ELECT	100UF	20.00%	10V
C4365	1-163-038-00	CERAMIC CHIP	0.1UF		25V
C4366	1-163-031-11	CERAMIC CHIP	0.01UF		50V
C4367	1-125-799-91	ELECT	1UF	20.00%	63V
C4371	1-164-004-51	CERAMIC CHIP	0.1UF	10.00%	25V
C4372	1-163-249-11	CERAMIC CHIP	82PF	5.00%	50V
C4377	1-104-665-11	ELECT	100UF	20.00%	10V
C4380	1-163-038-00	CERAMIC CHIP	0.1UF		25V
C4394	1-104-664-11	ELECT	47UF	20.00%	16V
C4395	1-163-249-11	CERAMIC CHIP	82PF	5.00%	50V
C4396	1-163-249-11	CERAMIC CHIP	82PF	5.00%	50V
C4397	1-163-249-11	CERAMIC CHIP	82PF	5.00%	50V

http://cxema.ru

P1

REF. NO.	PART NO.	DESCRIPTION			REMARK
C4398	1-125-797-91	ELECT	10UF	20.00% 50V	
C4399	1-125-797-91	ELECT	10UF	20.00% 50V	
		<CONNECTOR>			
CN4301	1-764-811-11	CONNECTOR, BOARD TO BOARD 10P			
CN4302	1-764-811-11	CONNECTOR, BOARD TO BOARD 10P			
CN4303*	1-564-506-11	PLUG, CONNECTOR 3P			
		<FERRITE BEAD>			
FB4301	1-410-397-21	FERRITE	1.1UH		
		<FILTER>			
FL4301	1-236-728-41	ENCAPSULATED COMPONENT			
		<IC>			
IC4301	8-759-655-57	IC SDA9288XE-B0121-GEG			
IC4302	8-759-568-62	IC BA7606F-E2			
IC4303	8-752-090-41	IC CXA2139S			
		<COIL>			
L4302	1-412-537-31	INDUCTOR	100UH		
L4304	1-408-603-31	INDUCTOR	10UH		
L4305	1-408-603-31	INDUCTOR	10UH		
L4306	1-408-603-31	INDUCTOR	10UH		
L4307	1-408-412-00	INDUCTOR	18UH		
L4308	1-408-611-31	INDUCTOR	47UH		
L4309	1-408-603-31	INDUCTOR	10UH		
L4310	1-408-611-31	INDUCTOR	47UH		
L4311	1-408-603-31	INDUCTOR	10UH		
L4312	1-408-603-31	INDUCTOR	10UH		
L4313	1-414-188-41	INDUCTOR	68UH		
L4314	1-414-856-11	INDUCTOR	10UH		
L4315	1-414-856-11	INDUCTOR	10UH		
L4316	1-414-856-11	INDUCTOR	10UH		
L4317	1-414-856-11	INDUCTOR	10UH		
		<TRANSISTOR>			
Q4301	8-729-230-49	TRANSISTOR 2SC2712-YG-TE85L			
Q4302	8-729-216-22	TRANSISTOR 2SA1162-YG-TE85L			
Q4303	8-729-424-59	TRANSISTOR UN2212-TX			
Q4304	8-729-421-22	TRANSISTOR UN2211-TX			
Q4305	8-729-421-22	TRANSISTOR UN2211-TX			
Q4306	8-729-230-49	TRANSISTOR 2SC2712-YG-TE85L			
Q4307	8-729-421-22	TRANSISTOR UN2211-TX			
Q4308	8-729-216-22	TRANSISTOR 2SA1162-YG-TE85L			
Q4313	8-729-216-22	TRANSISTOR 2SA1162-YG-TE85L			
Q4314	8-729-216-22	TRANSISTOR 2SA1162-YG-TE85L			
Q4315	8-729-216-22	TRANSISTOR 2SA1162-YG-TE85L			
Q4316	8-729-216-22	TRANSISTOR 2SA1162-YG-TE85L			
Q4317	8-729-230-49	TRANSISTOR 2SC2712-YG-TE85L			
Q4318	8-729-230-49	TRANSISTOR 2SC2712-YG-TE85L			
Q4322	8-729-230-49	TRANSISTOR 2SC2712-YG-TE85L			

REF. NO.	PART NO.	DESCRIPTION			REMARK
Q4323	8-729-230-49	TRANSISTOR 2SC2712-YG-TE85L			
Q4324	8-729-230-49	TRANSISTOR 2SC2712-YG-TE85L			
Q4325	8-729-216-22	TRANSISTOR 2SA1162-YG-TE85L			
Q4326	8-729-421-19	TRANSISTOR UN2213-TX			
Q4327	8-729-216-22	TRANSISTOR 2SA1162-YG-TE85L			
Q4328	8-729-216-22	TRANSISTOR 2SA1162-YG-TE85L			
Q4362	8-729-216-22	TRANSISTOR 2SA1162-YG-TE85L			
Q4363	8-729-216-22	TRANSISTOR 2SA1162-YG-TE85L			
Q4364	8-729-216-22	TRANSISTOR 2SA1162-YG-TE85L			
Q4365	8-729-230-49	TRANSISTOR 2SC2712-YG-TE85L			
Q4366	8-729-230-49	TRANSISTOR 2SC2712-YG-TE85L			
Q4368	8-729-230-49	TRANSISTOR 2SC2712-YG-TE85L			
Q4369	8-729-230-49	TRANSISTOR 2SC2712-YG-TE85L			
Q4371	8-729-230-49	TRANSISTOR 2SC2712-YG-TE85L			
Q4372	8-729-230-49	TRANSISTOR 2SC2712-YG-TE85L			
Q4373	8-729-230-49	TRANSISTOR 2SC2712-YG-TE85L			
Q4374	8-729-230-49	TRANSISTOR 2SC2712-YG-TE85L			
		<RESISTOR>			
R4300	1-216-065-61	RES-CHIP	4.7K	5%	1/10W
R4301	1-216-069-61	RES-CHIP	6.8K	5%	1/10W
R4302	1-216-053-61	RES-CHIP	1.5K	5%	1/10W
R4304	1-216-089-61	RES, CHIP	47K		(2012)
R4305	1-216-025-61	RES-CHIP	100	5%	1/10W
R4306	1-216-053-61	RES-CHIP	1.5K	5%	1/10W
R4307	1-216-065-61	RES-CHIP	4.7K	5%	1/10W
R4308	1-216-081-61	RES-CHIP	22K	5%	1/10W
R4309	1-216-067-00	METAL CHIP	5.6K	5%	1/10W
R4310	1-216-025-61	RES-CHIP	100	5%	1/10W
R4311	1-216-025-61	RES-CHIP	100	5%	1/10W
R4312	1-216-025-61	RES-CHIP	100	5%	1/10W
R4313	1-216-049-61	RES-CHIP	1K	5%	1/10W
R4314	1-216-049-61	RES-CHIP	1K	5%	1/10W
R4315	1-216-049-61	RES-CHIP	1K	5%	1/10W
R4316	1-216-025-61	RES-CHIP	100	5%	1/10W
R4317	1-216-025-61	RES-CHIP	100	5%	1/10W
R4318	1-216-033-61	RES-CHIP	220	5%	1/10W
R4319	1-216-045-00	METAL CHIP	680	5%	1/10W
R4320	1-216-081-61	RES-CHIP	22K	5%	1/10W
R4321	1-216-045-00	METAL CHIP	680	5%	1/10W
R4324	1-216-049-61	RES-CHIP	1K	5%	1/10W
R4325	1-216-027-61	RES-CHIP	120	5%	1/10W
R4326	1-216-053-61	RES-CHIP	1.5K	5%	1/10W
R4327	1-216-065-61	RES-CHIP	4.7K	5%	1/10W
R4328	1-216-067-00	METAL CHIP	5.6K	5%	1/10W
R4329	1-216-041-61	RES-CHIP	470	5%	1/10W
R4330	1-216-053-61	RES-CHIP	1.5K	5%	1/10W
R4332	1-216-089-61	RES, CHIP	47K		(2012)
R4333	1-216-025-61	RES-CHIP	100	5%	1/10W
R4334	1-216-025-61	RES-CHIP	100	5%	1/10W
R4335	1-216-025-61	RES-CHIP	100	5%	1/10W
R4336	1-216-041-61	RES-CHIP	470	5%	1/10W
R4337	1-216-041-61	RES-CHIP	470	5%	1/10W
R4338	1-216-049-61	RES-CHIP	1K	5%	1/10W
R4339	1-216-041-61	RES-CHIP	470	5%	1/10W
R4340	1-216-085-00	METAL CHIP	33K	5%	1/10W
R4341	1-216-081-61	RES-CHIP	22K	5%	1/10W

http://cxema.ru

P1 VM1

REF. NO.	PART NO.	DESCRIPTION			REMARK
R4343	1-216-049-61	RES-CHIP	1K	5%	1/10W
R4344	1-216-025-61	RES-CHIP	100	5%	1/10W
R4345	1-216-041-61	RES-CHIP	470	5%	1/10W
R4346	1-216-041-61	RES-CHIP	470	5%	1/10W
R4347	1-216-025-61	RES-CHIP	100	5%	1/10W
R4348	1-216-085-00	METAL CHIP	33K	5%	1/10W
R4349	1-216-025-61	RES-CHIP	100	5%	1/10W
R4350	1-216-085-00	METAL CHIP	33K	5%	1/10W
R4351	1-216-049-61	RES-CHIP	1K	5%	1/10W
R4352	1-216-041-61	RES-CHIP	470	5%	1/10W
R4353	1-216-049-61	RES-CHIP	1K	5%	1/10W
R4354	1-216-049-61	RES-CHIP	1K	5%	1/10W
R4355	1-216-049-61	RES-CHIP	1K	5%	1/10W
R4356	1-208-778-11	METAL CHIP	680	0.5%	1/10W
R4357	1-216-043-61	RES-CHIP	560	5%	1/10W
R4358	1-208-776-11	METAL CHIP	560	0.5%	1/10W
R4359	1-216-025-61	RES-CHIP	100	5%	1/10W
R4360	1-216-049-61	RES-CHIP	1K	5%	1/10W
R4361	1-216-041-61	RES-CHIP	470	5%	1/10W
R4362	1-216-055-61	RES-CHIP	1.8K	5%	1/10W
R4363	1-216-033-61	RES-CHIP	220	5%	1/10W
R4364	1-216-089-61	RES, CHIP	47K		(2012)
R4365	1-216-081-61	RES-CHIP	22K	5%	1/10W
R4366	1-216-295-61	SHORT CHIP	0		
R4368	1-216-049-61	RES-CHIP	1K	5%	1/10W
R4369	1-216-025-61	RES-CHIP	100	5%	1/10W
R4370	1-216-041-61	RES-CHIP	470	5%	1/10W
R4371	1-216-039-61	RES-CHIP	390	5%	1/10W
R4372	1-216-025-61	RES-CHIP	100	5%	1/10W
R4373	1-216-077-61	RES, CHIP	15K		(2012)
R4374	1-216-073-61	RES-CHIP	10G	5%	1/10W
R4375	1-216-073-61	RES-CHIP	10G	5%	1/10W
R4376	1-216-053-61	RES-CHIP	1.5K	5%	1/10W
R4377	1-216-047-00	METAL CHIP	820	5%	1/10W
R4378	1-216-047-00	METAL CHIP	820	5%	1/10W
R4379	1-208-780-11	METAL CHIP	820	0.5%	1/10W
R4380	1-216-053-61	RES-CHIP	1.5K	5%	1/10W
R4382	1-216-025-61	RES-CHIP	100	5%	1/10W
R4383	1-208-806-11	METAL CHIP	10K	0.5%	1/10W
R4384	1-216-081-61	RES-CHIP	22K	5%	1/10W
R4385	1-216-073-61	RES-CHIP	10G	5%	1/10W
R4386	1-216-073-61	RES-CHIP	10G	5%	1/10W
R4387	1-216-073-61	RES-CHIP	10G	5%	1/10W
R4388	1-216-025-61	RES-CHIP	100	5%	1/10W
R4389	1-216-065-61	RES-CHIP	4.7K	5%	1/10W
R4390	1-216-025-61	RES-CHIP	100	5%	1/10W
R4391	1-216-025-61	RES-CHIP	100	5%	1/10W
R4392	1-216-073-61	RES-CHIP	10G	5%	1/10W
R4393	1-216-025-61	RES-CHIP	100	5%	1/10W
R4394	1-216-075-61	RES-CHIP	12K	5%	1/10W
R4395	1-216-025-61	RES-CHIP	100	5%	1/10W
R4396	1-216-081-61	RES-CHIP	22K	5%	1/10W
R4397	1-216-049-61	RES-CHIP	1K	5%	1/10W
R4398	1-216-053-61	RES-CHIP	1.5K	5%	1/10W
R4400	1-216-033-61	RES-CHIP	220	5%	1/10W
R4401	1-216-041-61	RES-CHIP	470	5%	1/10W
R4402	1-216-295-61	SHORT CHIP	0		

REF. NO.	PART NO.	DESCRIPTION			REMARK
R4408	1-216-041-61	RES-CHIP	470	5%	1/10W
R4414	1-216-025-61	RES-CHIP	100	5%	1/10W
R4416	1-216-041-61	RES-CHIP	470	5%	1/10W
R4431	1-216-049-61	RES-CHIP	1K	5%	1/10W
R4432	1-216-689-11	RES, CHIP	39K		(2012)
R4433	1-216-073-61	RES-CHIP	10G	5%	1/10W
R4434	1-216-045-00	METAL CHIP	680	5%	1/10W
		<CRYSTAL>			
X4301	1-781-134-21	VIBRATOR, CRYSTAL			
X4302	1-781-132-21	VIBRATOR, CRYSTAL			
X4303	1-760-095-21	VIBRATOR, CRYSTAL			

****

*	A-1342-556-A	VM1 BOARD MOUNTED **********			
	4-382-854-11	SCREW (M3X10), P, SW (+)			
		<CAPACITOR>			
C5900	1-102-115-00	CERAMIC	560PF	10.00%	50V
C5902	1-104-661-91	ELECT	330UF	20.00%	16V
C5903	1-161-830-00	CERAMIC	0.0047UF		500V
C5905	1-126-925-11	ELECT	470UF	20.00%	10V
C5906	1-130-491-00	MYLAR	0.047UF	5.00%	50V
C5907	1-107-638-11	ELECT	33UF	20.00%	160V
C5908	1-106-383-00	MYLAR	0.047UF	10.00%	200V
C5909	1-126-933-11	ELECT	100UF	20.00%	16V
C5910	1-130-471-00	MYLAR	0.001UF	5.00%	50V
C5911	1-107-949-11	ELECT	2.2UF	20.00%	160V
C5912	1-104-999-11	MYLAR	0.1UF	10.00%	200V
C5913	1-130-471-00	MYLAR	0.001UF	5.00%	50V
C5914	1-126-933-11	ELECT	100UF	20.00%	16V
C5916	1-130-491-00	MYLAR	0.047UF	5.00%	50V
C5917	1-126-925-11	ELECT	470UF	20.00%	10V
C5918	1-102-244-00	CERAMIC	220PF	10.00%	500V
C5919	1-136-165-00	MYLAR	0.1UF	5.00%	50V
		<CONNECTOR>			
CN2801*	1-564-506-11	PLUG, CONNECTOR 3P			
CN5901*	1-564-510-11	PLUG, CONNECTOR 7P			
CN5904*	1-770-723-11	CONNECTOR, BOARD TO BOARD 8P			
		<DIODE>			
D5901	8-719-911-19	DIODE 1SS119-25TD			
D5902	8-719-110-88	DIODE RD39ES-B2			
D5903	8-719-911-19	DIODE 1SS119-25TD			
D5904	8-719-110-88	DIODE RD39ES-B2			
D5905	8-719-911-19	DIODE 1SS119-25TD			
D5906	1-249-406-11	CARBON	120	5%	1/4W
D5907	1-249-406-11	CARBON	120	5%	1/4W

http://cxema.ru

The components identified by shading and mark ⚠ are critical for safety. Replace only with part number specified.

VM1

REF. NO.	PART NO.	DESCRIPTION			REMARK
		<COIL>			
L5901	1-414-187-11	INDUCTOR	47UH		
		<TRANSISTOR>			
Q5901	8-729-230-45	TRANSISTOR 2SC2458TP-YGR			
Q5902	8-729-809-26	TRANSISTOR 2SA1606-E			
Q5903	8-729-230-45	TRANSISTOR 2SC2458TP-YGR			
Q5904	8-729-119-76	TRANSISTOR 2SA1175TP-HFE			
Q5905	8-729-230-45	TRANSISTOR 2SC2458TP-YGR			
Q5906	8-729-809-29	TRANSISTOR 2SC4159-E			
Q5907	8-729-119-78	TRANSISTOR 2SC2785TP-HFE			
		<RESISTOR>			
R5901	1-249-401-11	CARBON	47	5%	1/4W
R5902	1-249-414-11	CARBON	560	5%	1/4W
R5903	1-247-734-11	CARBON	39	5%	1/2W
R5904	1-220-952-91	METAL MELF	330	5%	1/2W
R5905	1-220-958-91	RES, METAL FILM 1K			
R5906	1-220-958-91	RES, METAL FILM 1K			
R5907	1-220-958-91	RES, METAL FILM 1K			
R5908	1-249-383-11	CARBON	1.5	5%	1/4W
R5909	1-220-951-91	METAL	220	5%	1/2W
R5910	1-220-946-81	METAL MELF	68	5%	1/2W
R5911	1-249-439-11	CARBON	68K	5%	1/4W
R5912	1-220-975-91	METAL MELF	47K	5%	1/2W
R5914	1-220-946-81	METAL MELF	68	5%	1/2W
R5915	1-220-969-91	METAL CHIP	10K	5%	1/2W
R5916	1-220-959-91	METAL MELF	1.5K	5%	1/2W
R5917	1-220-957-91	METAL MELF	820	5%	1/2W
R5918	1-220-969-91	METAL CHIP	10K	5%	1/2W
R5919	1-249-417-11	CARBON	1K	5%	1/4W
R5920	1-249-439-11	CARBON	68K	5%	1/4W
R5921	1-216-476-11	METAL OXIDE	180	5%	3W
R5922	1-220-955-91	METAL MELF	560	5%	1/2W
R5923	1-249-383-11	CARBON	1.5	5%	1/4W
R5925	1-249-400-11	CARBON	39	5%	1/4W
R5927	1-220-957-91	METAL MELF	820	5%	1/2W
R5929	1-215-880-00	METAL OXIDE	10	5%	2W

****

MISCELLANEOUS
****

REF. NO.	PART NO.	DESCRIPTION	REMARK
	1-136-536-31	CAP, HIGH-VOLTAGE FILM 3000PF	
	1-202-818-00	RES, SOLID 1.0K	
	1-529-172-11	SPEAKER, LOUD (10CM)	
⚠	1-416-495-11	COIL, DEMAGNETIC	
	1-452-094-00	CIRCULAR DISC MAGNET B	
	1-452-032-00	MAGNET,DISC	
	1-452-896-11	COIL, NA ROTATION (RT200)	
	1-251-658-21	SPLITTER RF	
*	1-555-110-00	CABLE, P-P	
⚠	1-574-062-61	CORD, POWER (WITH CONNECTOR) 2.5A/250V	
	1-529-179-11	SPEAKER (8CM)	
	1-529-190-11	SPEAKER (5CM)	
⚠	8-451-494-31	DEFLETION YOKE (Y29RSA-S)	
⚠	8-735-057-05	PICTURE TUBE (M68LNH070X) (KV-XF29M97)	
⚠	8-735-056-05	PICTURE TUBE (M68LNH070X) (KV-XF29M67)	
	8-453-011-11	NA299-M	

****

ACCESSORIES PACKING MATERIALS
****

REF. NO.	PART NO.	DESCRIPTION	REMARK
	A-1028-409-A	PACKING GROUP (SET)	
	A-1501-451-A	BOX ASSY, SPEAKER (3D)	
	3-701-910-00	SCREW, SPECIAL (DIA. 3.8X20)	
	4-076-400-11	MANUAL, INSTRUCTION	
	4-392-003-31	BAND, HOLD	
	4-392-004-21	CLIP	
*	4-065-594-01	BAG, PROTECTION	
*	4-069-218-02	INDIVIDUAL CARTON	
*	4-069-219-01	CUSHION (UPPER)(ASSY)	
*	4-069-220-01	CUSHION (LOWER)(ASSY)	
*	4-067-018-01	CUSHION (1), SEAL	
*	4-067-019-01	CUSHION (2), SEAL	
*	4-067-020-02	CUSHION (3), SEAL	
*	4-067-021-02	CUSHION (4), SEAL	
*	4-067-022-01	CUSHION (5), SEAL	
*	4-065-515-01	BOX (TP), 3D SPEAKER	
*	4-065-516-01	BOX (BT), 3D SPEAKER	

****

REMOTE COMMANDER
****

REF. NO.	PART NO.	DESCRIPTION	REMARK
	1-418-040-11	REMOTE COMMANDER (RM-953)	
	4-978-977-01	BATTERY COVER, REMOTE COMMANDER	

9-872-202-01

Sony Corporation
Sony Technology Malaysia Sdn. Bhd.
TV Business of General Area

English
2000CM70034-1
Printed in Malaysia
© 2000. 3

http://cxema.ru